Molift Rail System

EN - Handbook

molift
a part of Etac

MRS19201 Rev B 2014-02-18

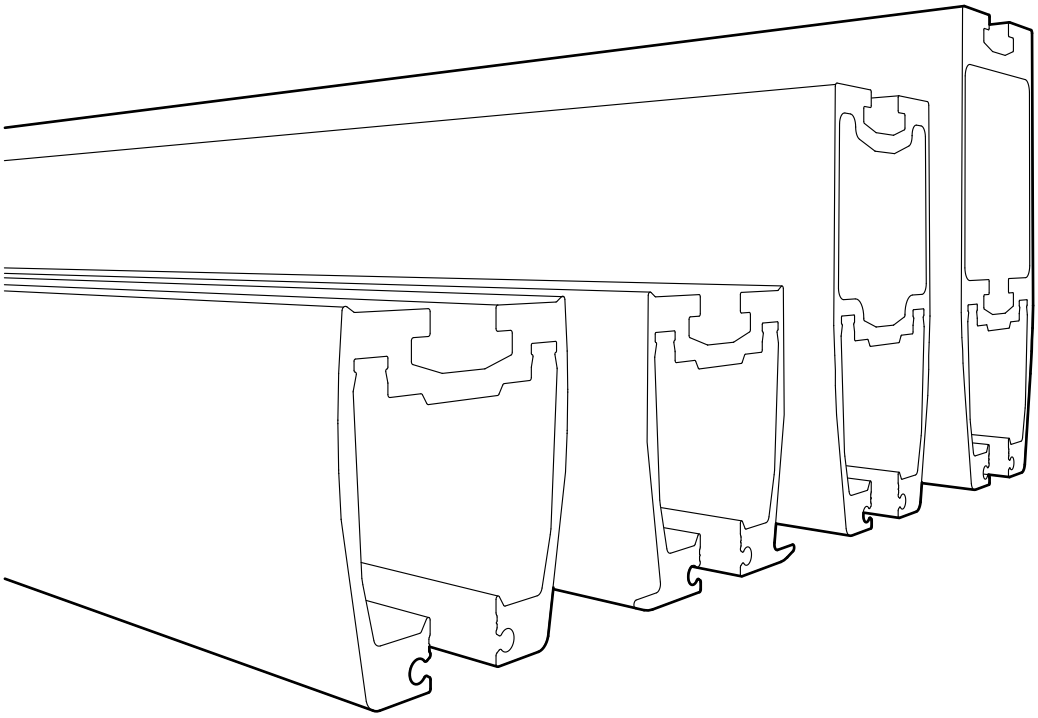

CE

English Manual

Content

Important

This User Manual contains important safety instructions and information regarding the use of the lifter and accessories.

In this manual the user is the person being lifted. The assistant is the person operating the lifter.

Warning!
This symbol indicates important information related to safety. Follow these instructions carefully.

Visit www.molift.net for download of documentation to ensure you have the latest version.

Molift Rail System (MRS)

Introduction

Molift Overhead Systems consist of a rail system, Molift Rails System (MRS) combined with the lift motor choices Molift AIR or Molift Nomad which give innovative and efficient solutions when it comes to lifting needs for disabled persons.

Molift Overhead Systems are easy and safe to use and can solve most lifting situations. The functional and user friendly design provides greater access to the user and increases assistant and user safety. Molift solution gives a highly flexible, innovative, cost effective and profitable investment.

General

This handbook provides support and guidance to installation performance of Molift overhead lift systems and contains important information about the design criteria and installation solutions. It is important to thoroughly understand the content of the handbook.

Conditions of Performing Installation

Lift and transfer of a person will always pose a certain risk and only certified personnel are allowed to install the equipment and accessories covered by this technical manual.

Only personnel authorized by Etac can perform installation of the Molift overhead system and issue the installation certificate, all in accordance with Etac's installation instructions and this handbook.

The lifter is not intended to be operated by the person being lifted. If a hoist is to be used by a disabled person living on their own, then some form of communication device shall be installed in the area of use of the hoist so that in the event of an emergency the disabled person is able to summon assistance. This may, for example, be the fitting of an alarm system or the supply of a conveniently placed telephone, etc.

Declaration of conformity

CE

The Molift Rail System and related accessories described in this handbook are CE marked in accordance with EU Council Directive 93/42/EEC concerning medical devices, class 1, and is manufactured in conformity with standards IEC 60601-1, IEC 60601-1-2 and NS-EN ISO 10535:2006.

Components made by other manufacturers

We recommend only using Etac Molift components. Etac shall not be liable for faults or accidents that can occur when using components made by other manufacturers.

System should consist of only original MRS components. If not Decalaration of conformity is not valid and Etac is not responisble for warranty of the system

1. How to use this handbook

In order to design a lifting solution, create a specification, order the parts and install the overhead systems You need following documents apart from this Handbook:

- Molift Pricelist
- Molift Product catalogue
- Site survey
- Installation instructions

The Handbook is divided into nine main chapters.

Chapter 1 – Molift Rail System (MRS)

Introduction of Molift Rail System. General terms and a description how to use this handbook.

Chapter 2 - Installation criteria – Principles

Description of the principles for installing a Molift Rail System, Site survey process and how to handle different constructions material in buildings.

Chapter 3 –System Overview

Overview of possible system configuration and combinations of MRS.

Chapter 4 – Component Overview

This chapter describes the MRS products and which components are available for different design solutions.

Chapter 5 - Design Conditions

This chapter describes the design conditions, limitations and possibilities how to combine the MRS products to create a sufficient and safe Molift Overhead System.

Chapter 6 - Installation methods

This Chapter describes work flow and tools for survey and installation process.

Chapter 7 - Final Installation Procedure

This Chapter describes procedure for the final testing and certification of installed rail system.

Chapter 8 - System combinations – Examples

This Chapter describes a few of the most common design solutions of Molift Rail System. Shows combination possibilities, measurements and examples of specifications.

Chapter 9 - Installation instructions

This Chapter describe list of available Specific Installation Instructions for the various mounting options for MRS.

Chapter 10 - Maintenance

This Chapter describes how to perform periodic inspection, service and repair to the rail system.

2. Installation criteria – Principles

2.1 Site survey – Design criteria

A site survey is the first project input, and it is of great importance that this is performed and archived in a proper way. We recommend that all points in our Site Survey template are considered, and that existing on-site conditions are documented preferably with photos and drawings.

Depending of the size of a ceiling lift installation project, it is also of importance to consider how to organize logistics for a ceiling lift installation:

- When should the installation take place (in larger building projects)?
- What floor is the installation to be done?
- How do we get the rails there? (Crane? Elevator? Stairs?)
- How to install efficiently? Installations teams or single workers?
- How to handle disposals (packaging materials)?

2.2 Lifting points

One important issue in the survey is to identify and define lifting points and optimal placement of the rail systems.

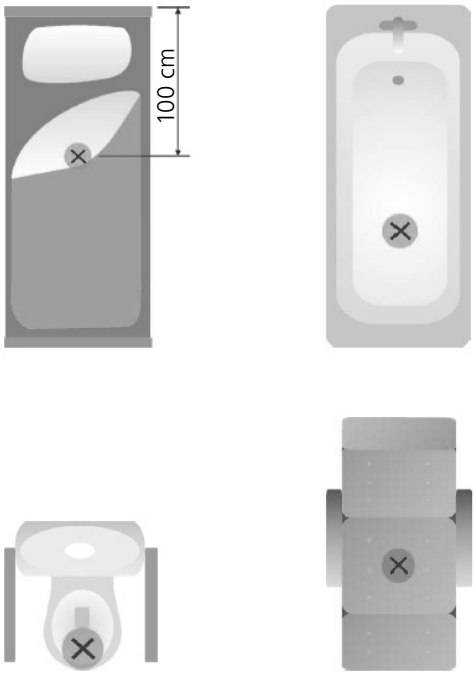

Figure: Furniture and lifitng points

2.3 Mounting Molift Rail System

The way of mounting a ceiling lift system is based on the specific materials and structural design on each specific site.

Ceiling materials:

- Concrete; hollow core slabs or compact layers
- Wood structures (requires reinforcements between rafters)
- Light materials (LECA, Siporex etc)

Wall materials:

- Concrete
- Bricks
- Wood structure
- Light walls (Gyproc/plasterboards)

Upright supports:

- Upright supports are used where the existing structure or other installations does not allow fixing in walls or ceiling.

Reinforcements to existing structues

- Reinforcements must be installed if the existing building structure OR the materials are too weak for the installation

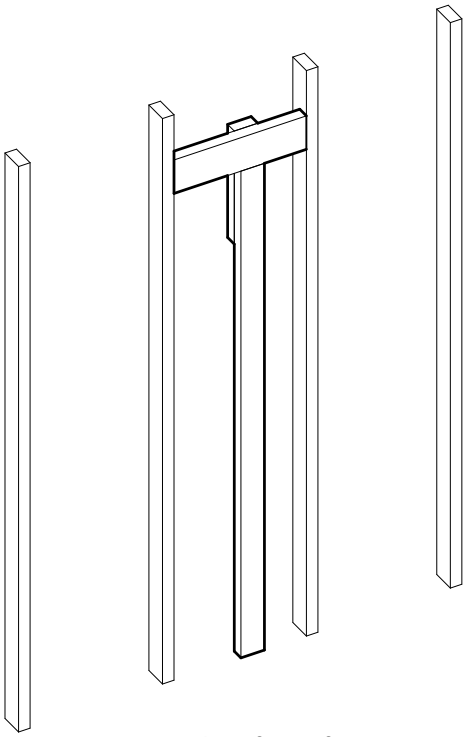

Figure: Example of reinforcement of wood wall structure with upright reinforcement between two studs for mounting of wall bracket or wall rail.

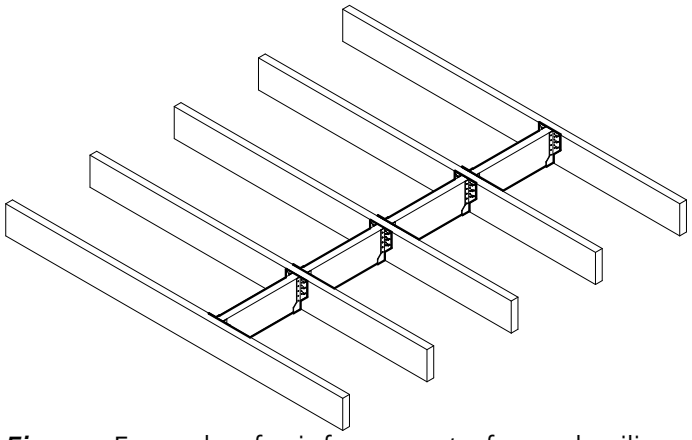

Figure: Example of reinforcement of wood ceiling structure with joist hangers and reinforcement between joists.

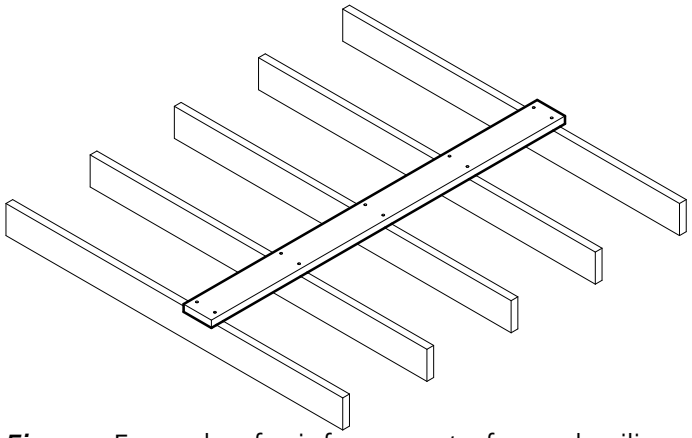

Figure: Example of reinforcement of wood ceiling structure with lying joist over joists.

2.4 Point loads

All systems should have minimum of two anchoring (attachment) points.
One attachment point = one or more fixings (expander bolts, chemical anchors etc.)

All attachment points of a ceiling lift system should, according to prevailing standard EN-ISO 10535:2006, withstand a pullout force; the working load of the system installed times a safety factor 1,5.

MRS attachment point Load Calculations:

- Molift Lift motors have 5 different weight capacities within the range: 160 – 300 kg

Weight capacity	Nomad	Air
160 kg	X	
205 kg	X	X
230 kg	X	
255 kg	X	
300 kg		X

- Standard ceiling lift system including any straight rail or traverse system with 1 lift motor.
- Ultimate Point load for each support attachment location is based upon the maximum capacity of the lift motor + estimated weight of the equipment at the support attachment location times a **safety factor of 1,5**
- Estimated weight of equipment at pendant support location for **standard** system = approx. 30 kg
  (includes: lift motor weight, rails, pendant, traverse carrier, etc)

Example:

For a **standard system** with 200 kg motor:
200 kg = **200 kg – Safe Working Load**
200 kg +30 kg = **230 kg – Working Load**
230 kg x 1,5 = **345 kg – Ultimate Point load**

All fixings should always be tightened with torque specified by the anchor/fixture manufacturer.

3. System Overview

Molift Rail System (MRS) is a ceiling hoist system built in three different main configurations:
1. Single rail system
2. Traverse rail system
3. Combination of single rail and traverse systems

The area below the track system is defined as the lifting area. The area below a straight rail system is limited to the rail, while a traverse system gives lifting area below the area covered by the traversing secondary rail.

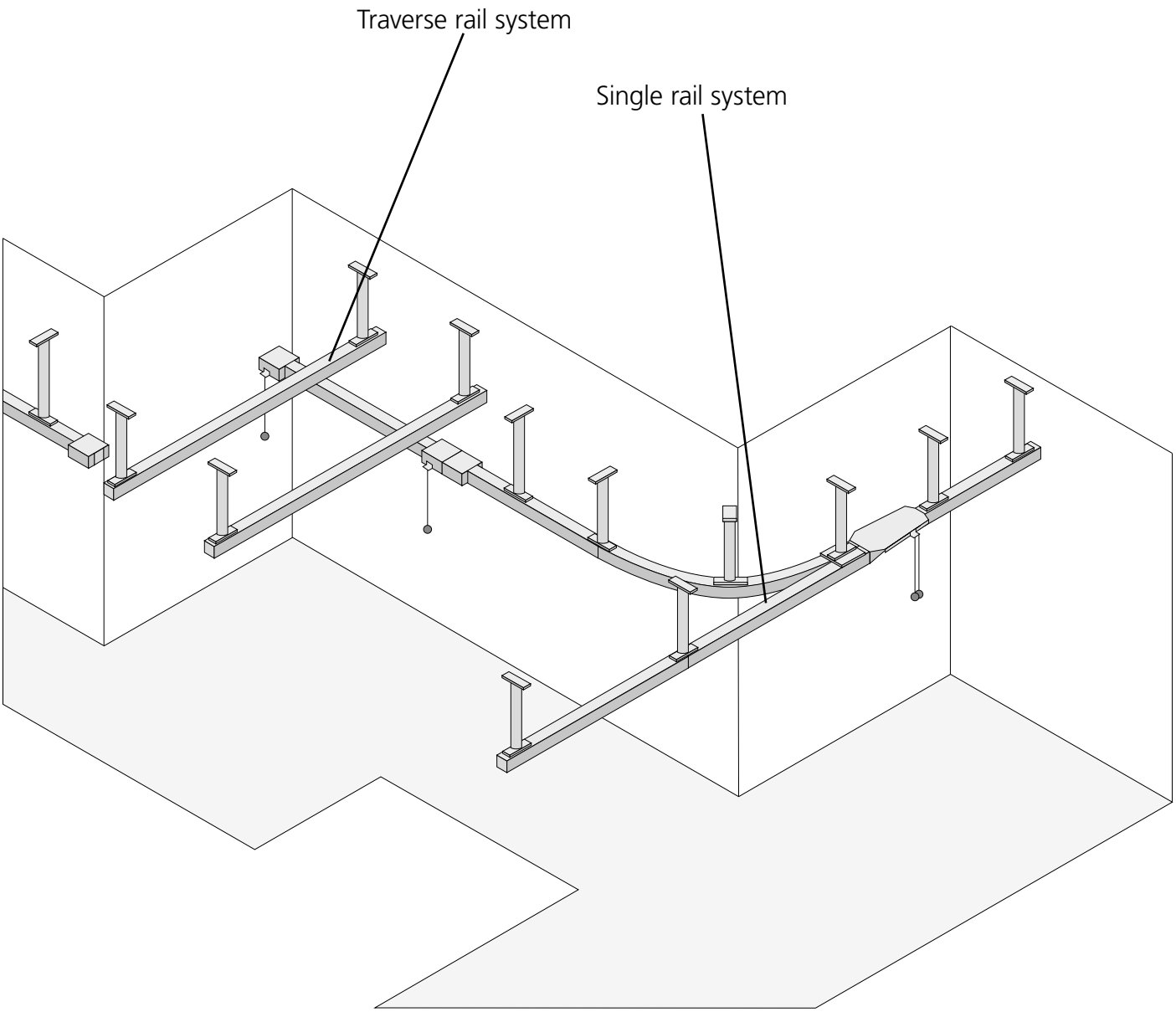

3.1 Single rail system

In a straight rail system the lift motor can be moved horizontally along the rail path. By combining MRS curves and rails it is possible to create single rail systems with expanded lifting area. The curve rail system can only be mounted to ceiling and does not allow wall mounting.

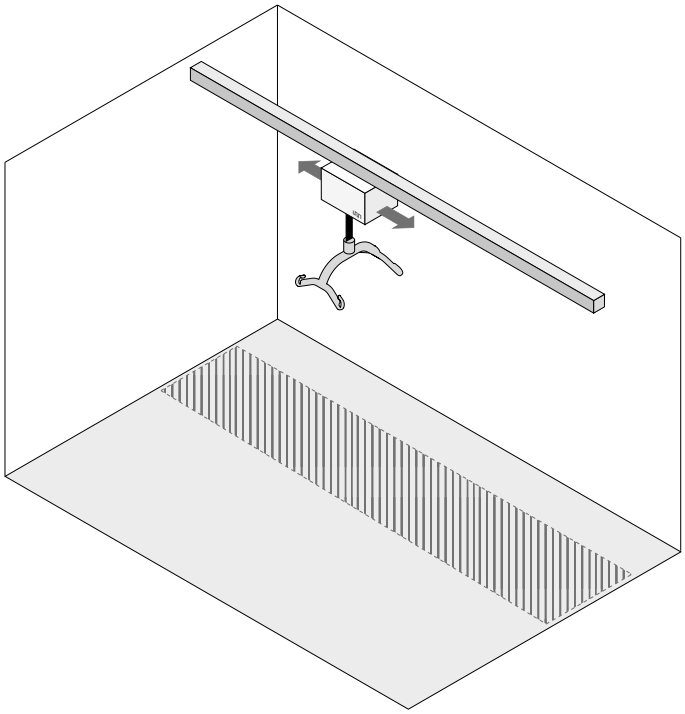

Lifting Area = Hatched area on floor under lifter.

3.1.1 Ceiling mounted Straight rail system

Can be mounted in four different ways:

1. Directly to ceiling without brackets
2. Mounted to ceiling with brackets
3. Suspended from the ceiling with telescopic brackets
4. Suspended from the ceiling with threaded rods

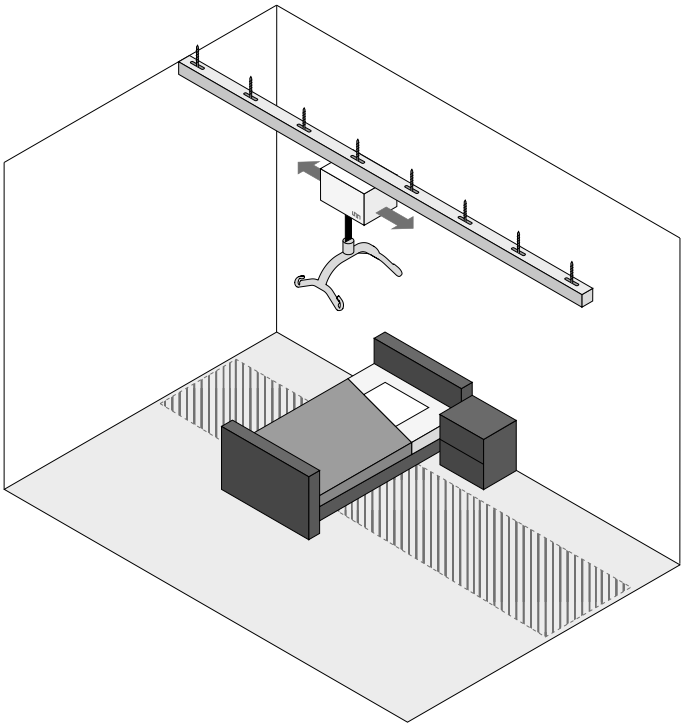

Figure: Ceiling mounted direct to ceiling without brackets

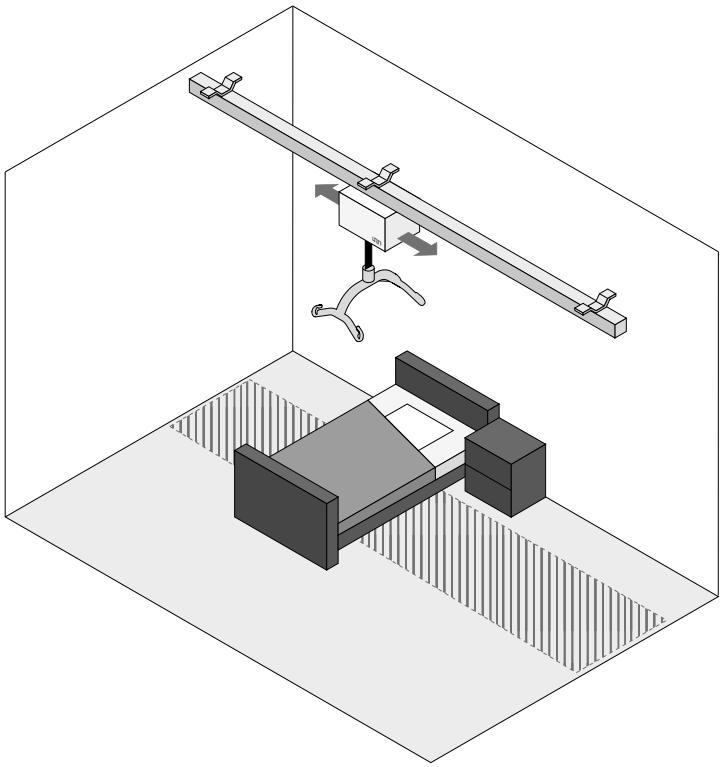

Figure: Ceiling mounted with open ceiling using 40mm brackets

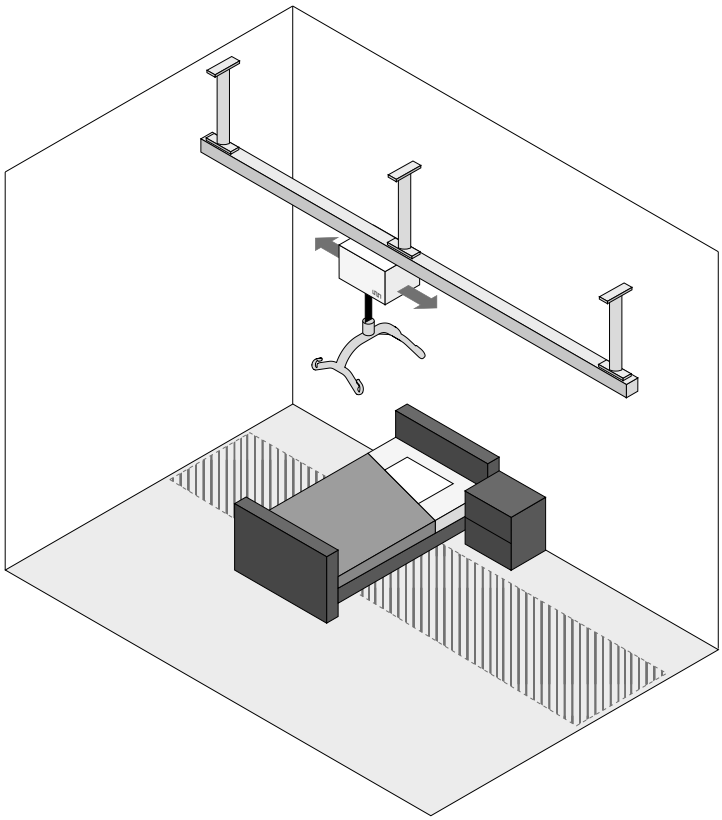

Figure: Ceiling mounted with telescopic brackets

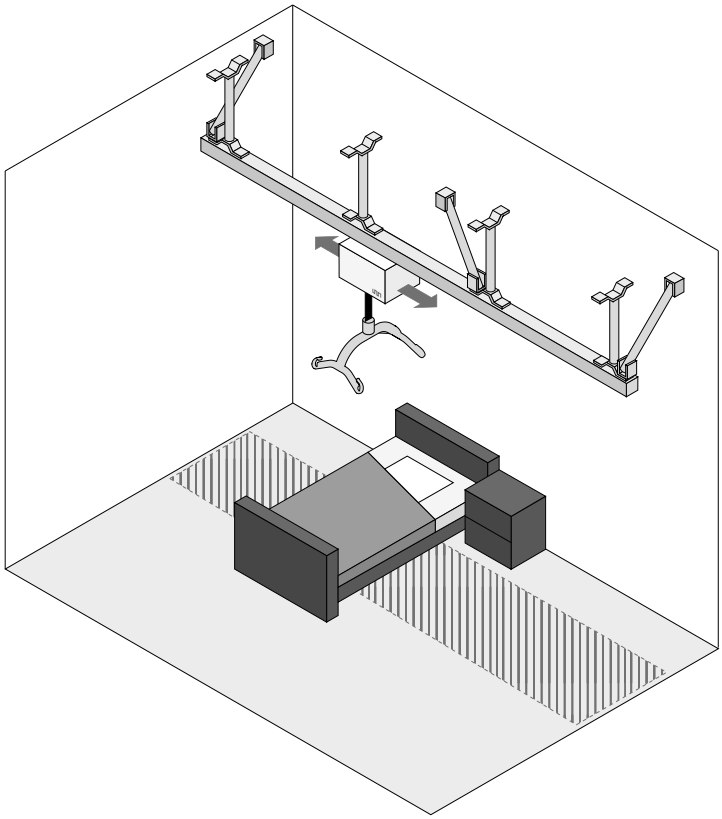

Figure: Ceiling mounted with threaded rods

3.1.2 Ceiling mounted Curve rail system

By combining MRS curves and rails it is possible to create single rail systems with expanded lifting area. This solution does not allow free standing or wall mounting. Can be mounted to ceiling only.

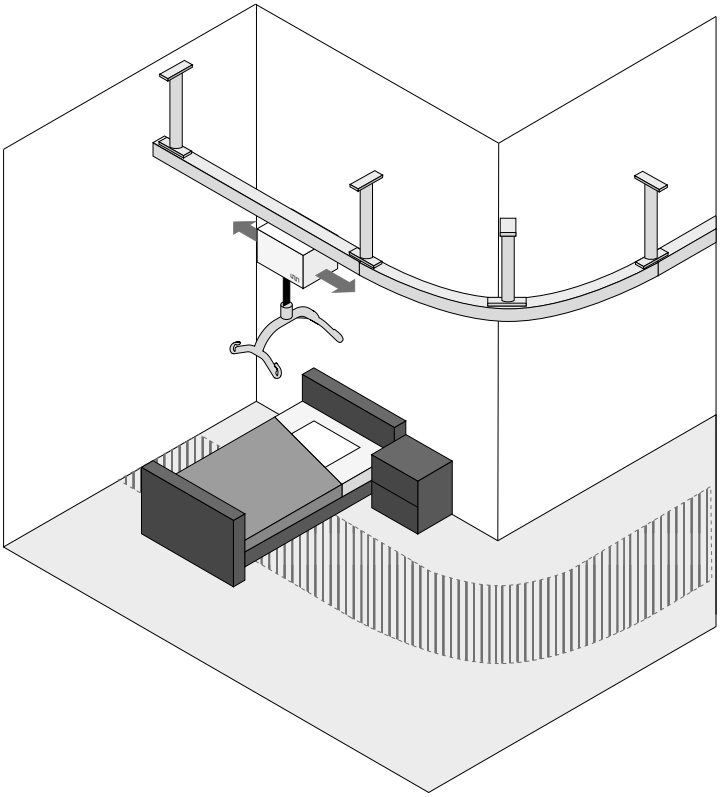

Figure: Ceiling mounted with telescope brackets

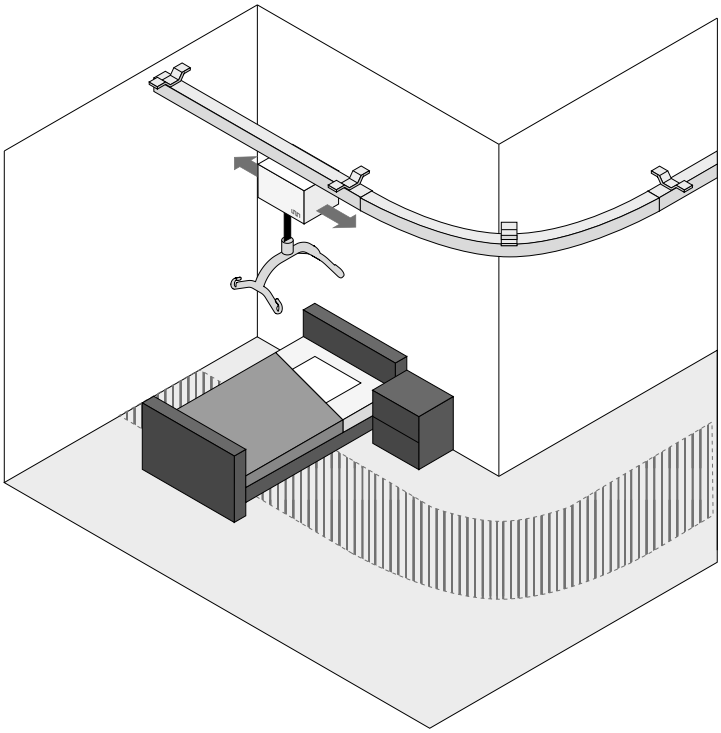

Figure: Ceiling mounted with open ceiling using 40 mm brackets.

3.1.3 Wall mounted Straight rail system

A wall mounted system is mounted on separate wall brackets or on brackets connected to uprights supported by the wall.

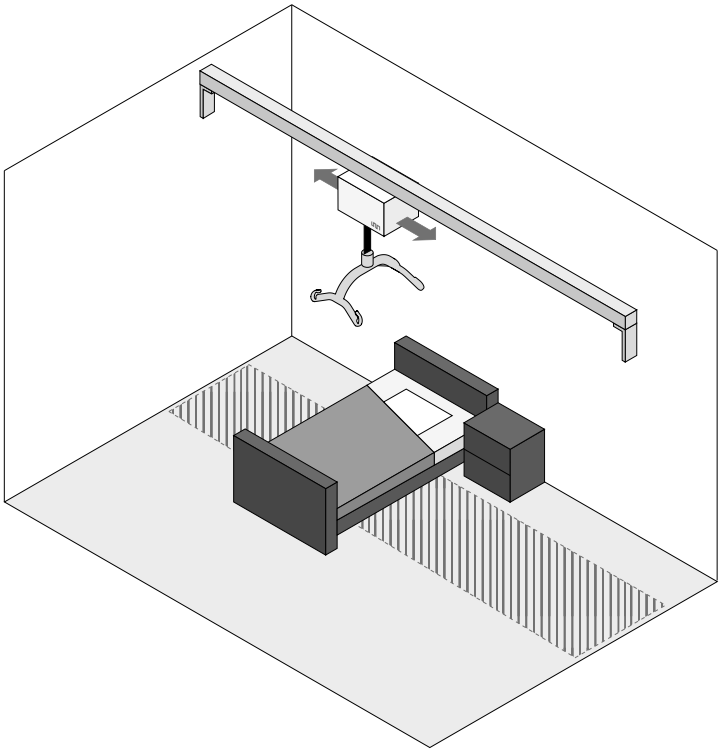

Figure: Wall mounted wall bracket

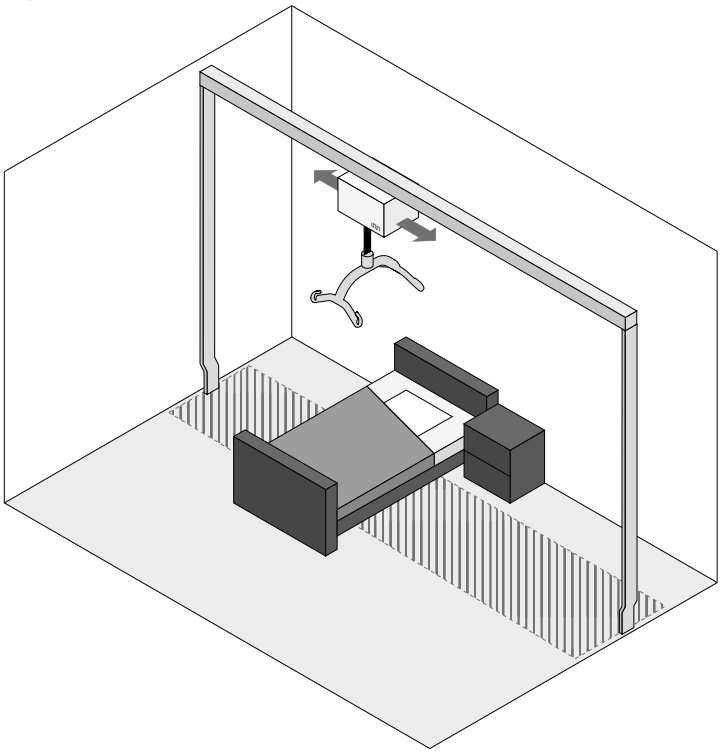

Figure: Wall mounted Wall brackets supported by upright supports

3.2 Traverse System

A traverse system is built up by two parallel primary rails, a secondary rail connected to the primary rails by a traverse trolley in each primary rail. The lifting motor is connected in the secondary rail. This system allows full room coverage.

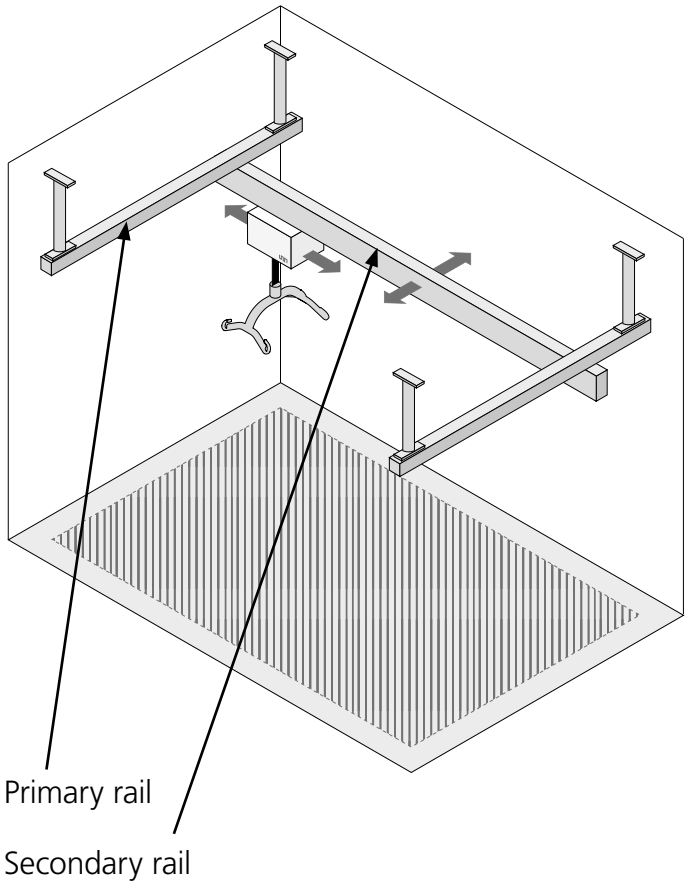

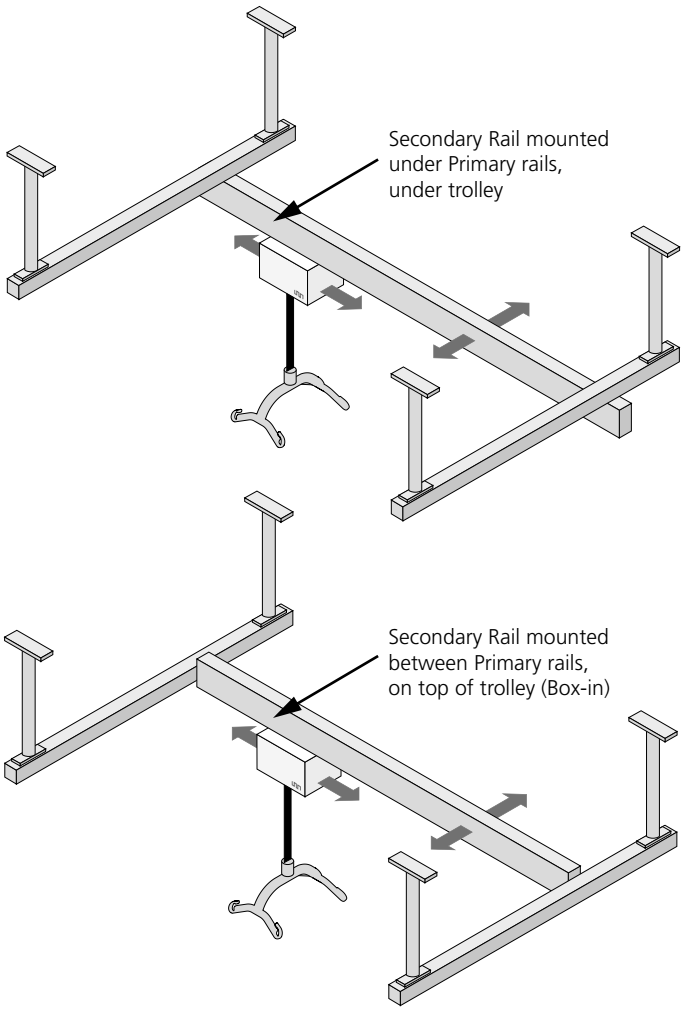

3.2.1 Ceiling mounted traverse system

Ceiling mounted traverse rail system can be mounted in different ways:

1. Directly in ceiling without brackets
2. Directly in ceiling with brackets
3. Suspended from the ceiling with telescopic brackets
4. Suspended from the ceiling with threaded rods

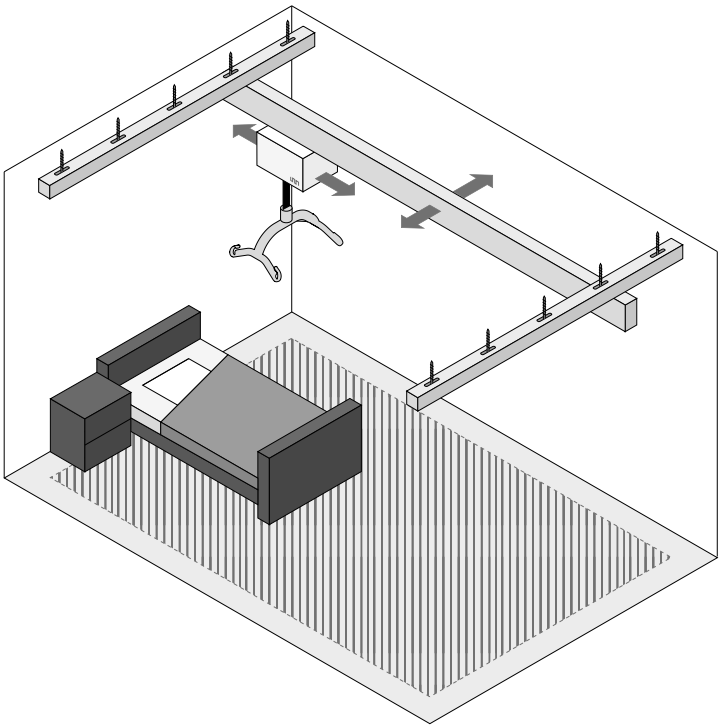

Figure: Ceiling mounted without brackets direct to ceiling

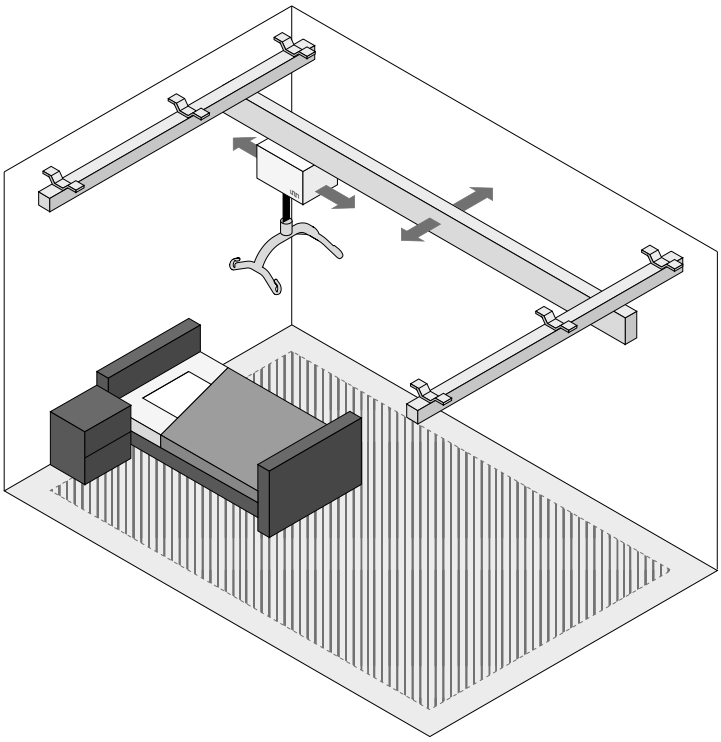

Figure: Ceiling mounted with brackets with open ceiling profile

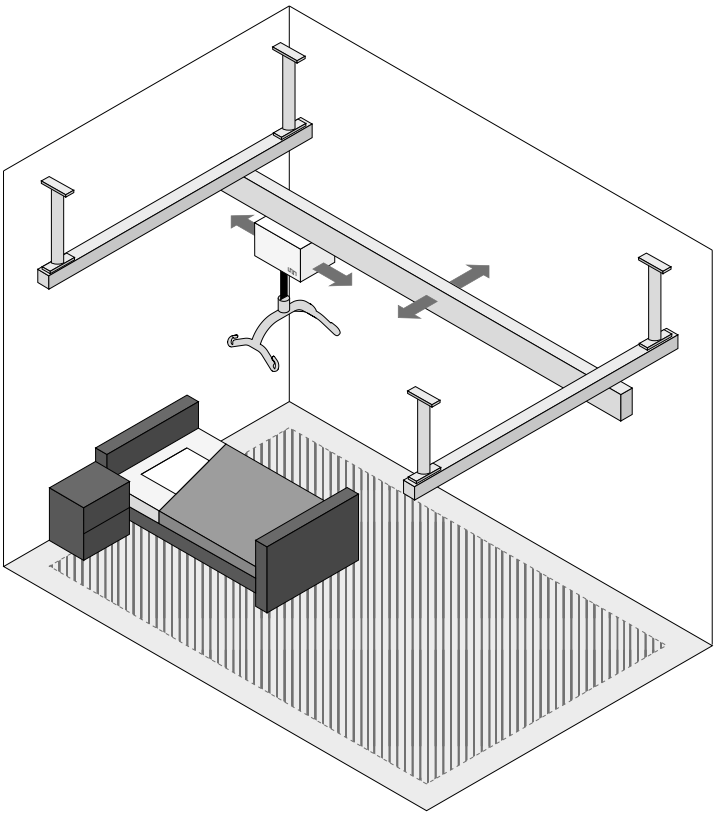

Figure: Ceiling mounted telescopic brackets with open ceiling profile

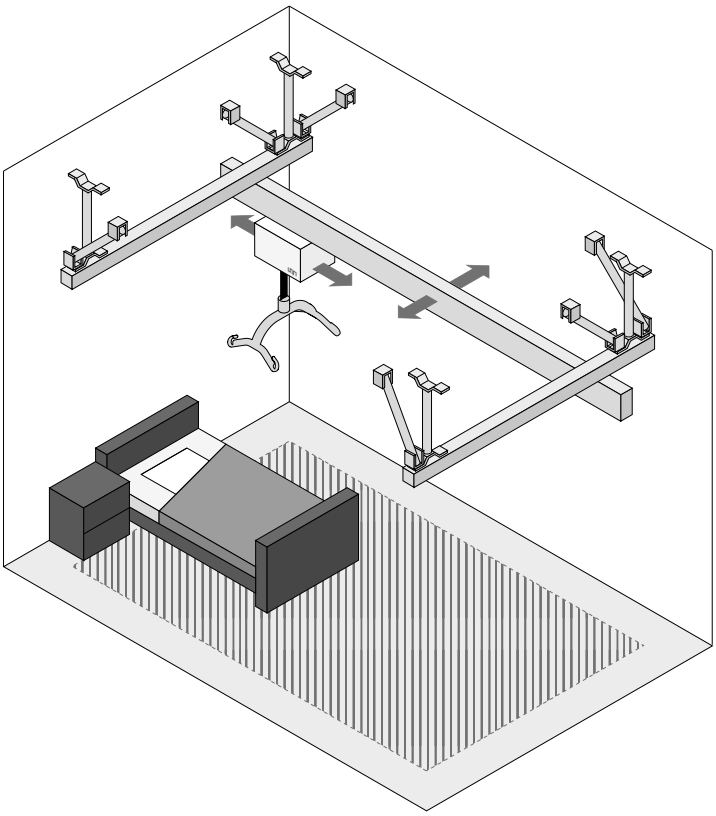

Figure: Ceiling mounted threaded rods with open ceiling profile

3.2.2 Wall mounted traverse system

A wall mounted system is mounted on separate wall brackets, wall mounted rails or on brackets connected to uprights supported by the wall and the floor.

1. Primary rails mounted on separate wall brackets.
2. Primary rails mounted on brackets connected to uprights supported by the wall and the floor.
3. Primary rails mounted on wall rails.

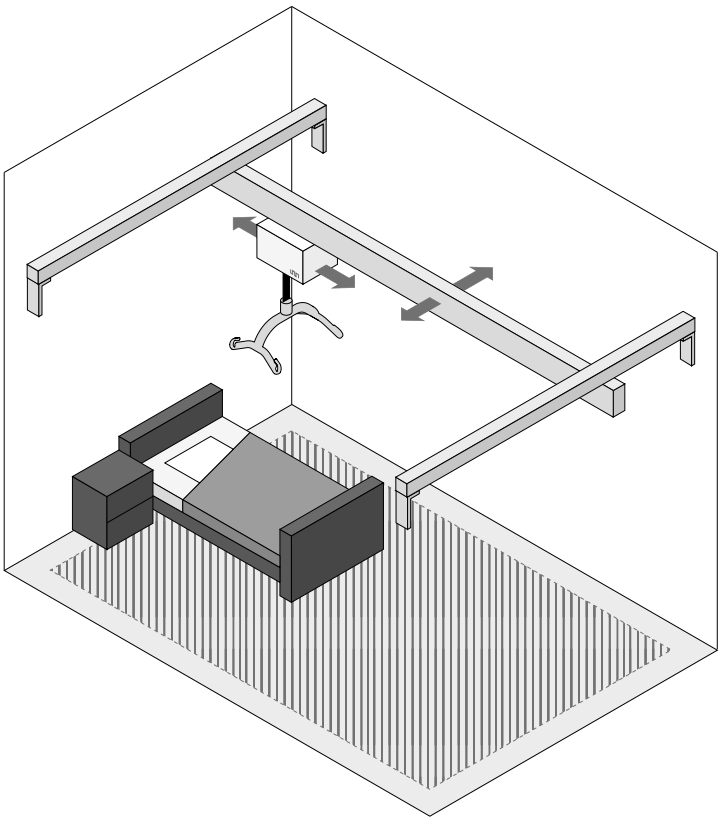

Figure: Wall mounted rail with wall brackets

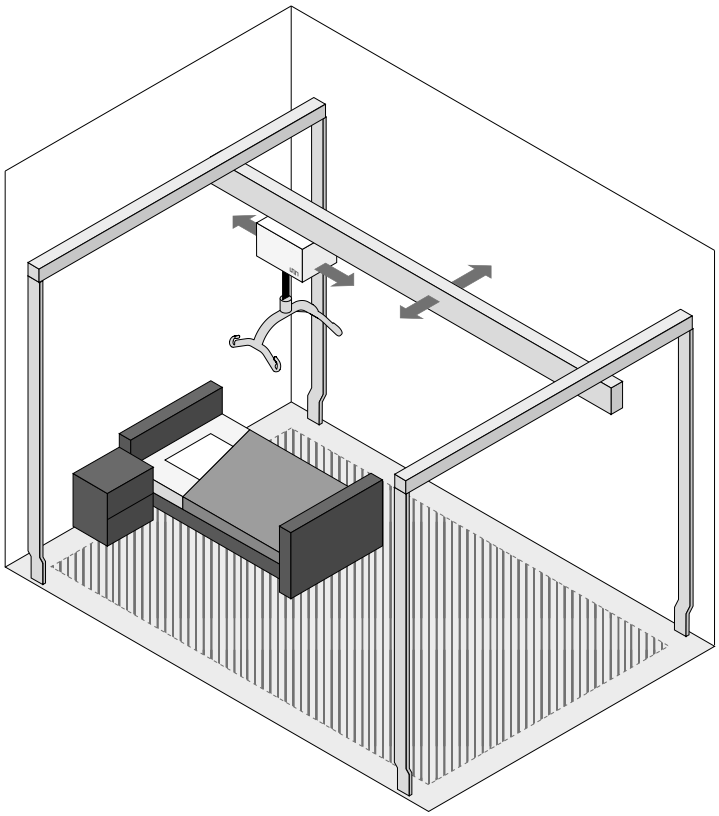

Figure: Wall mounted with wall brackets and upright supports

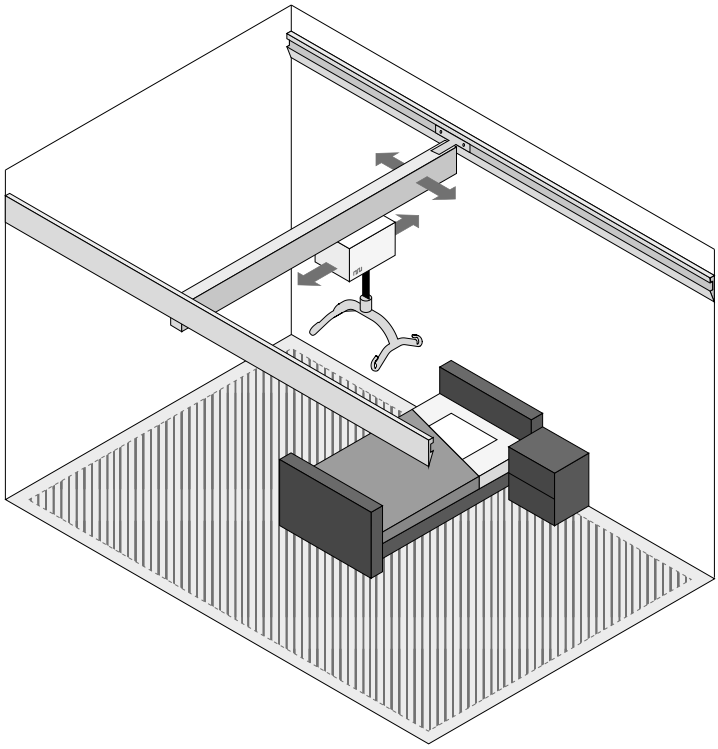

Figure: Wall mounted rail direct to wall with wall rail

3.3 Combination of rail systems

MRS allows a great variation of possibilities when combining traverse systems and single rail system. Transfer between different systems/rooms and locations can be solved in several ways with MRS The simplest way is by extending the single rail track through doorway.

The systems can also be combined with different switches such as Rail switch and Traverse switch. Climbing from one system to next is also an option both with permanently mounted lift motor Molift AIR and portable lift motor Molift Nomad.

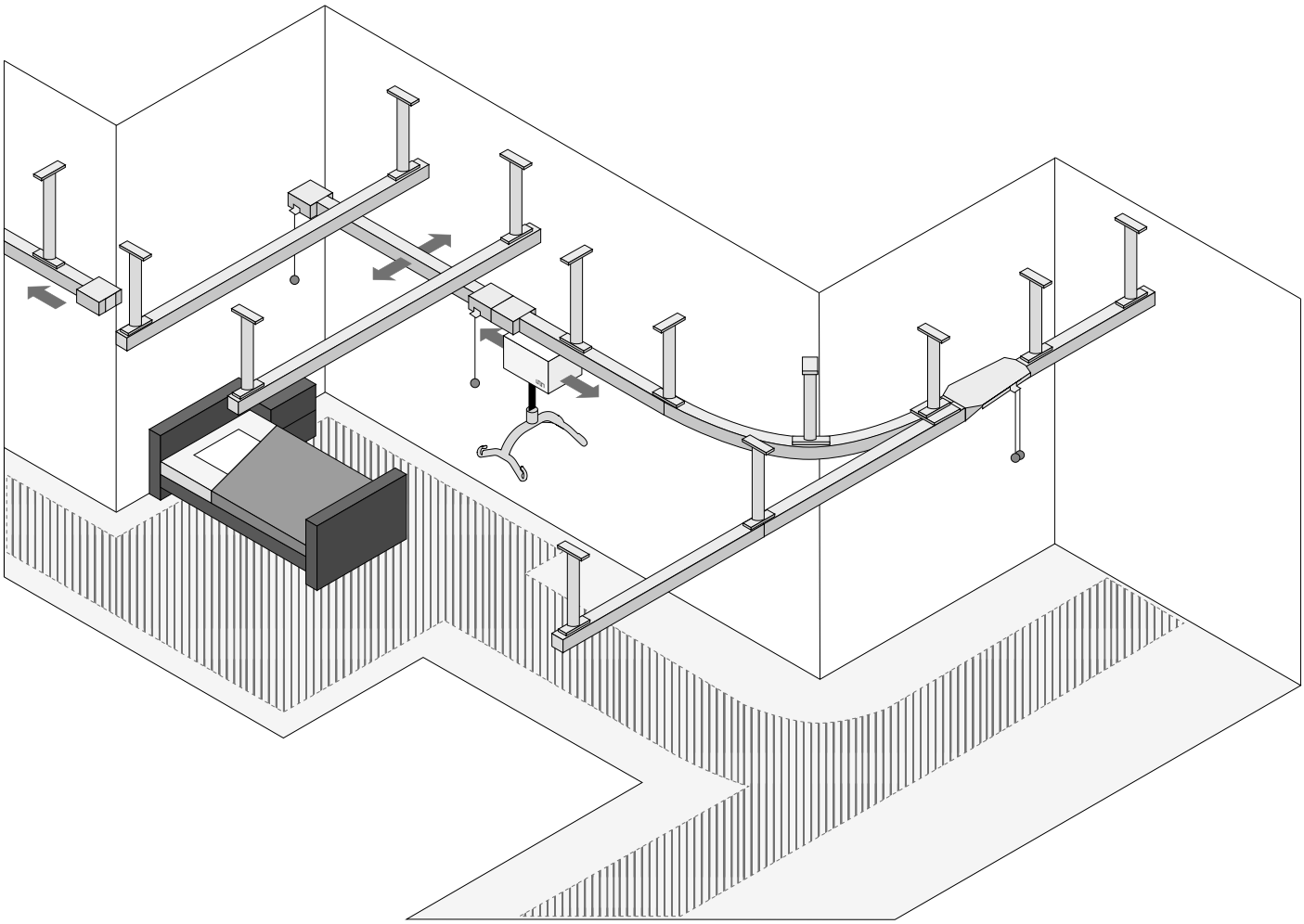

3.3.1 Switch systems

For Single rails, switching direction from straight rail to curve etc. Manually controlled.

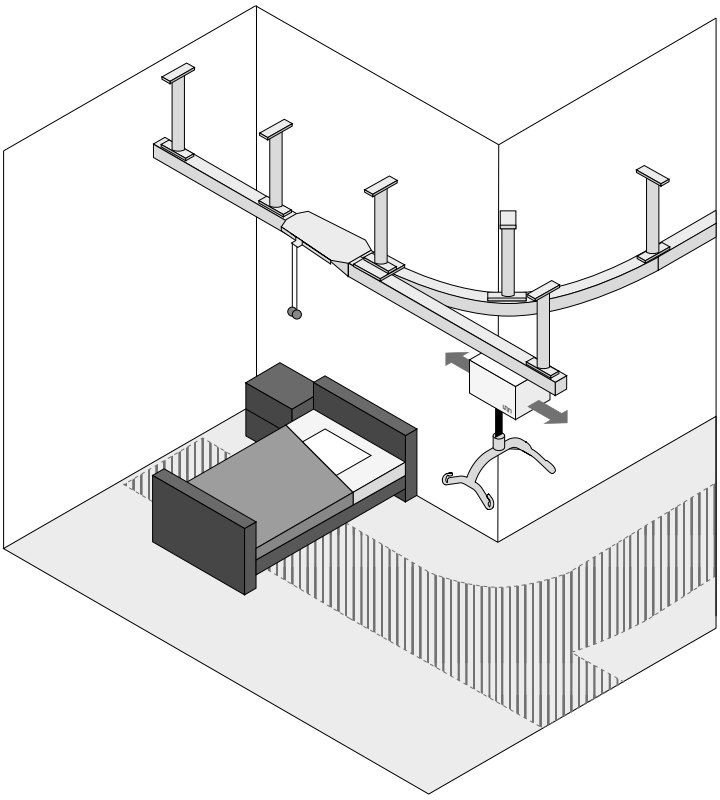

Figure: Rail switch

Traverse Switch – For transfer from secondary rail in a traverse system into a straight rail or another secondary rail in a traverse system. Manually controlled.

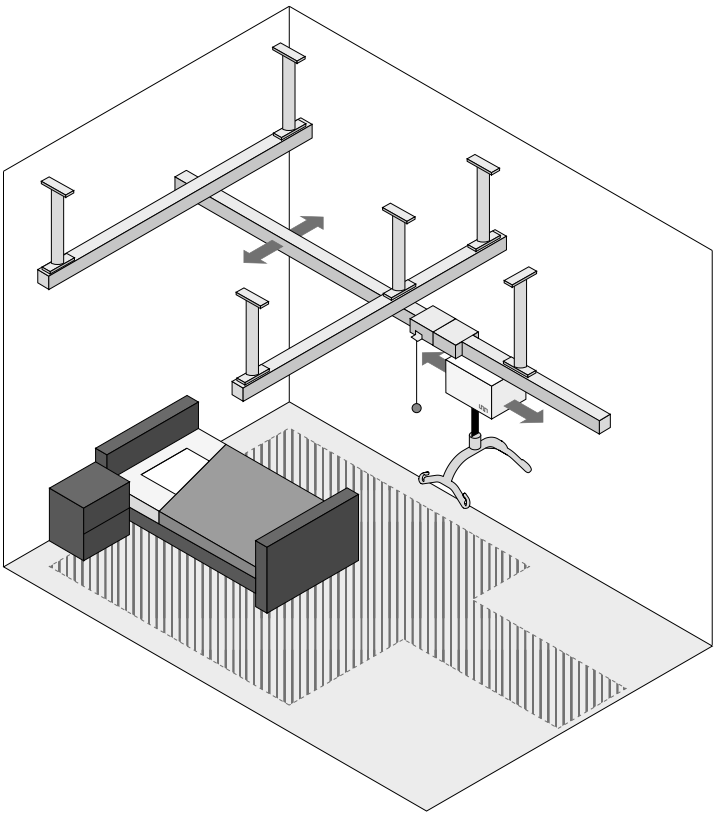

Figure: Traverse system with switch to straight rail

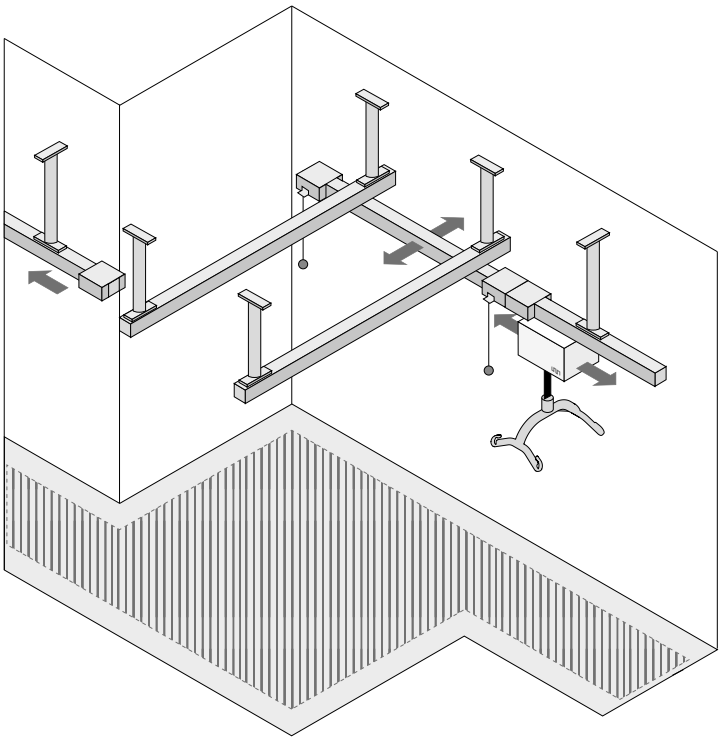

Figure: Traverse system with switch in both ends.

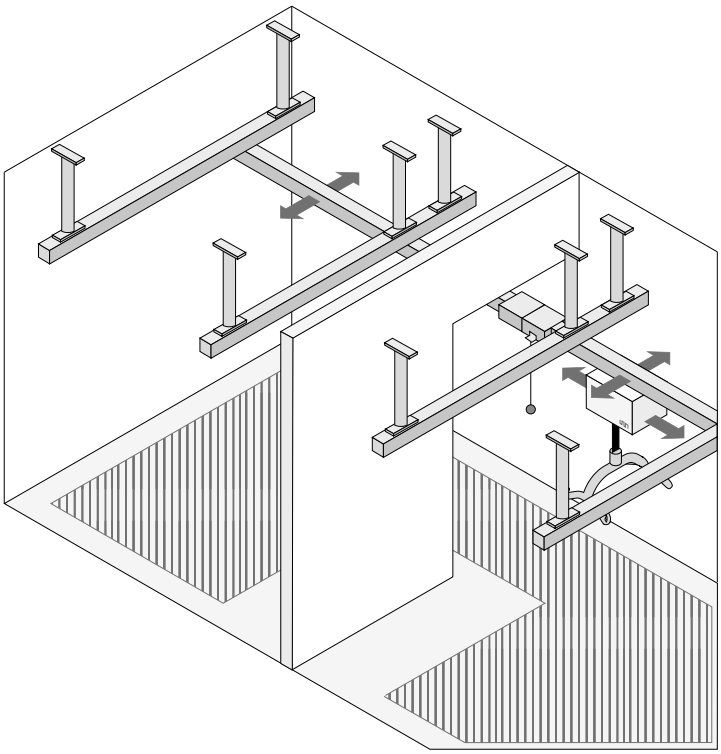

Figure: Double traverse system connected with switches.

3.3.2 Climbing systems

Both the permanently mounted Molift AIR and the portable Molift Nomad are suitable for climbing (room to room transfer) between two rails system

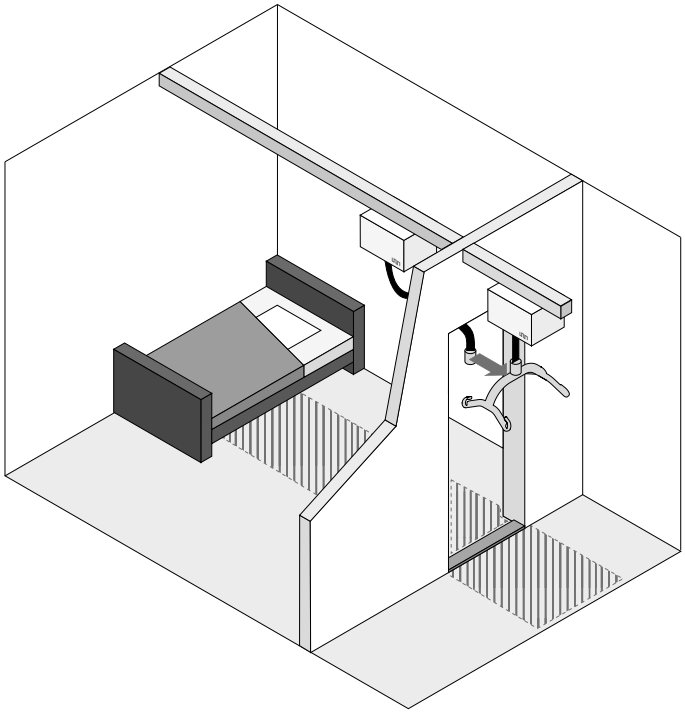

Figure: Room to Room transfer with permanent mounted lift motors Molift Air.

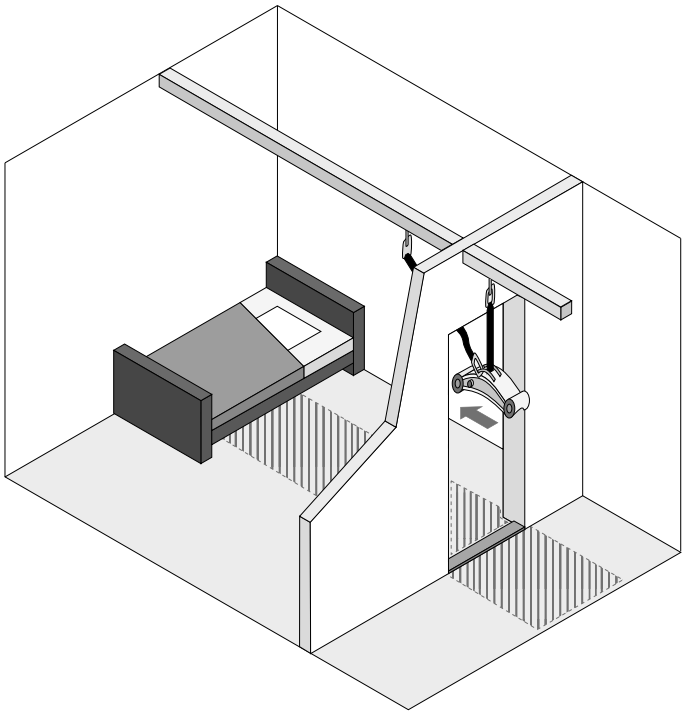

Figure: Room to Room transfer with Portable motor Molift Nomad.

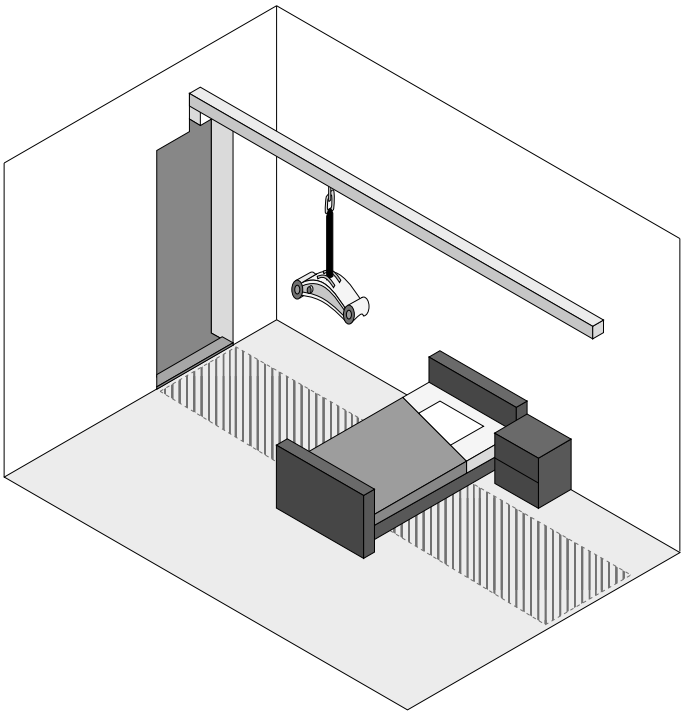

Figure: Hatch in door opening.

Room to room transfer Molift Air

With a room to room transfer coupling for suspensions (accessory) it is possible to use two hoists to transfer a person from room to room through a doorway between two rail systems that are not connected.

1. Move both ceiling hoists as close as possible to doorway.
2. Lower hoist B as much as possible without the user touching the floor.
3. Lower lifting strap on hoist A as far as needed to connect it too suspension on hoist B
4. Make sure both lifting straps are properly connected for a safe transfer
5. Drive hoist A upwards, and lower lifting strap on hoist B, continue until user is transferred from room to room.
6. Pay attention and make sure user does not touch the floor
7. The transfer is complete when there is no load on lifter B. Lift user to a comfortable height, disconnect band from lifter B and continue transfer with lifter A.

The directional safety feature that prevents lifting if angle on lifting strap is to steep might be activated during a room to room transfer. If the hoist doesn't respond to Hand control "up" button, lower the other lifting strap until angle sensor deactivates.

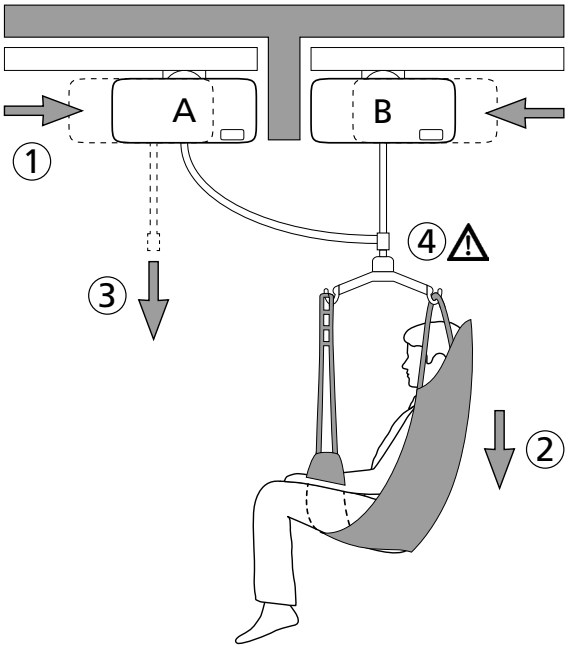

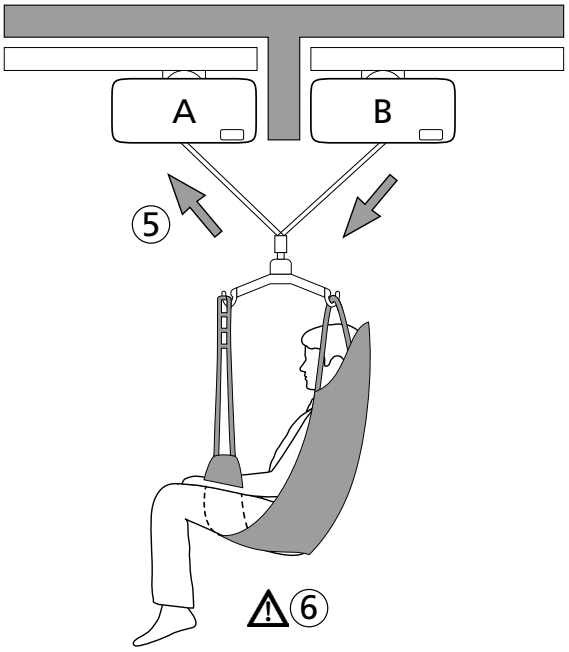

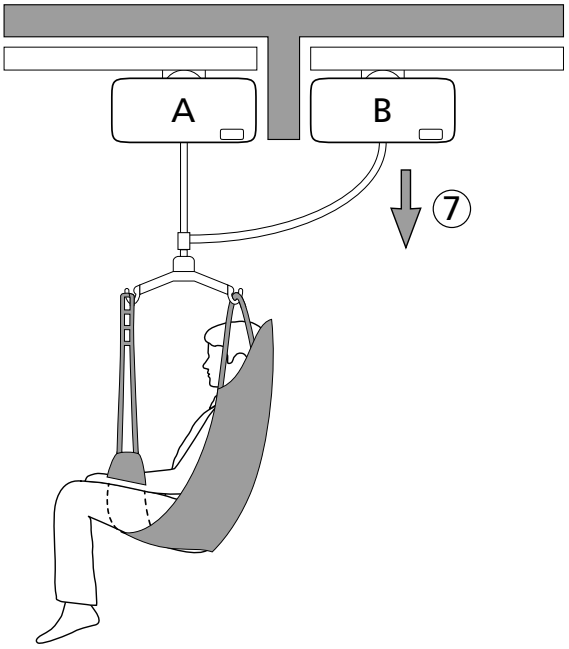

Never lift the user higher than necessary to carry out a lift.

Never leave a user unattended in a lifting situation.

There is a risk of injury to user or assistant from a swinging lifting strap, suspension or hand control.

Room to room transfer Molift Nomad

With a climbing band (accessory) it is possible to transfer a person from room to room through a doorway between two rail systems that are not connected, with a portable hoist.

1. Move the hoists and trolley with climbing band as close as possible to doorway.

2. Lower hoist and connect the climbing band to the hoist, make sure it is properly connected for a safe transfer

3. Lower the hoist. The climbing band will take the load and hoist will move through doorway.

4. Pay attention and make sure user does not touch the floor

5. Lower the hoist until the climbing band is taking up all the load, and the hoist lifting band can be released.

6. Release the hoists lifting band and connect to trolley in the other room. Run lifter up until the climbing band can be released. The transfer is complete.

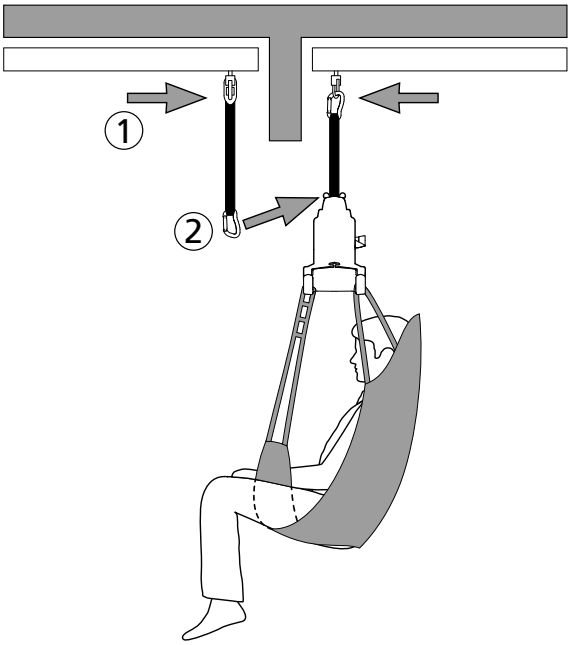

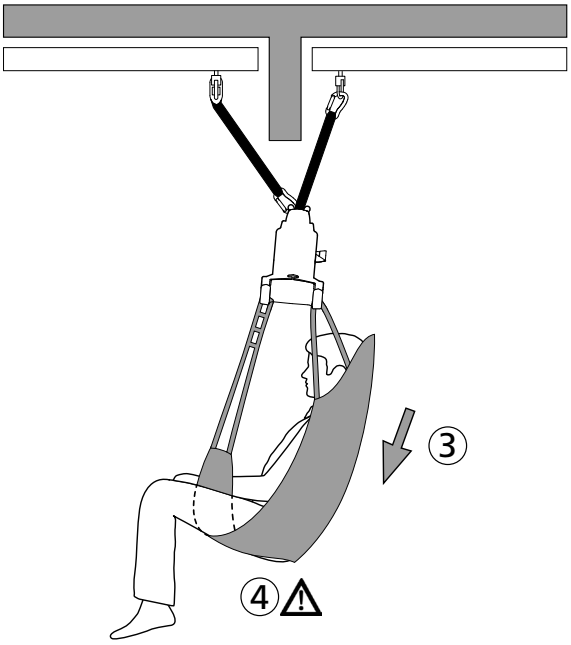

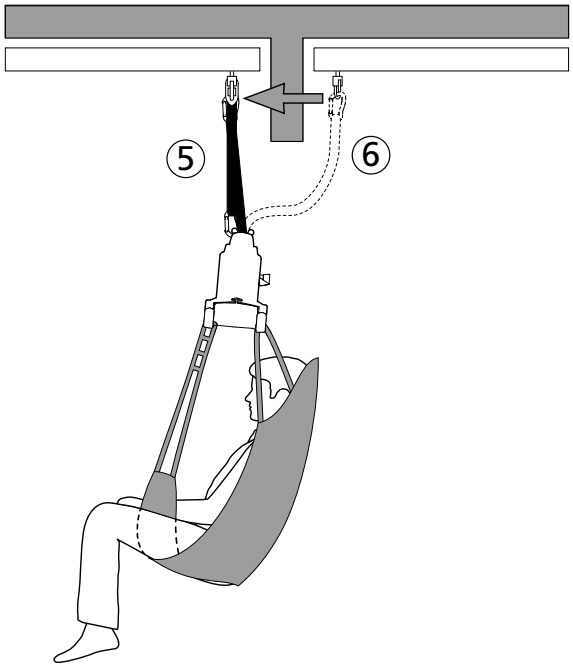

Never lift the user higher than necessary to carry out a lift.

Never leave a user unattended in a lifting situation.

There is a risk of injury to user or assistant from a swinging lifting strap, suspension or hand control.

4. Component Overview

This chapter describes the MRS products and which components are available for different design solutions. For more details and information of possible design, restrictions and other conditions see Chapter 5. Design conditions.

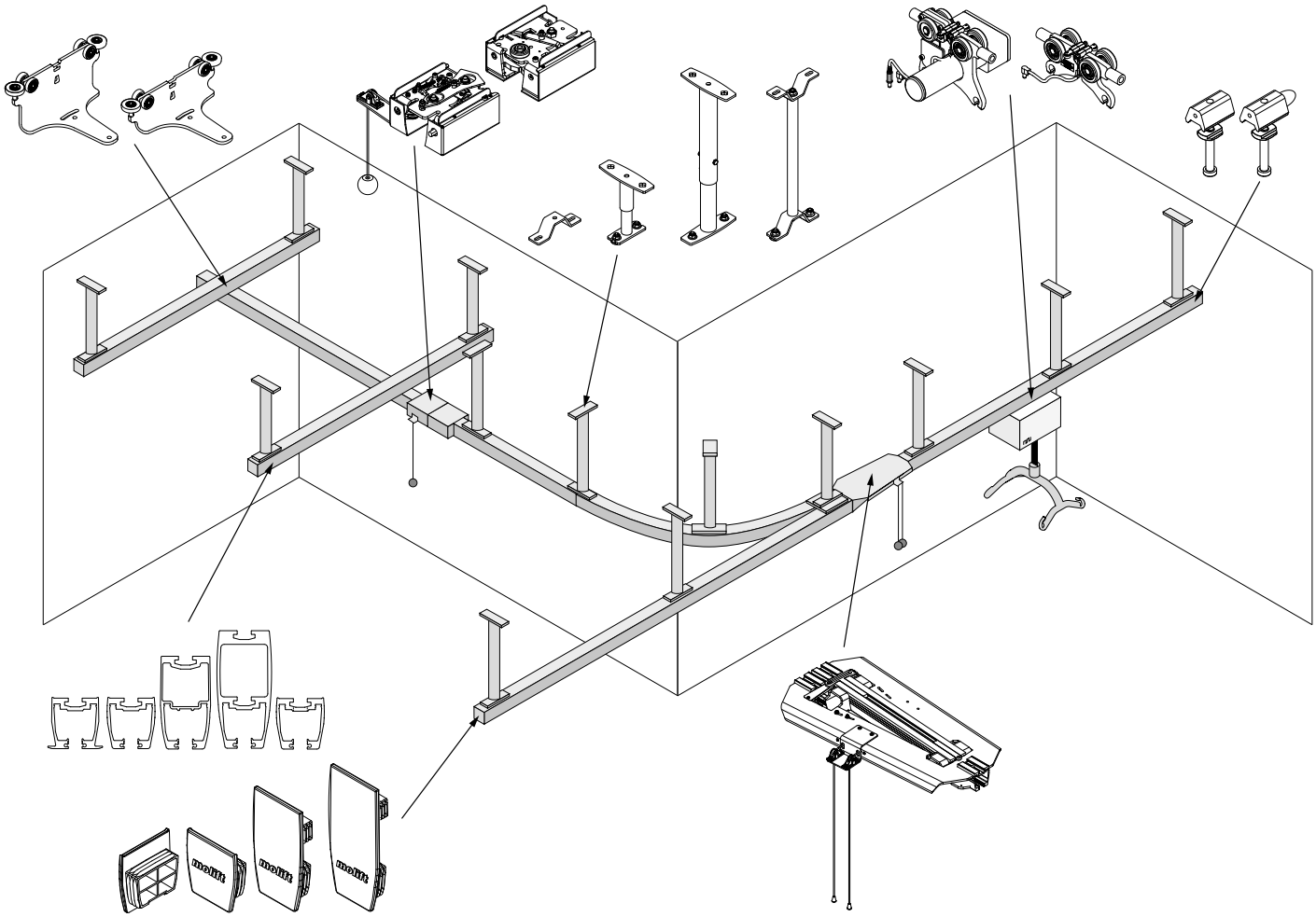

4.1 Attachment

4.1.1 Ceiling Mounted System

MRS includes 5 different attachments of ceilings mounted systems.

1. Direct in ceiling which does not require any attachments, just bolts directly into the ceiling (Requires H62 DC profile).
2. Fixed Bracket. 40mm height. Two fixing points to ceiling
3. Telescope Thread Bracket. 80-200mm. Two fixing points to ceiling
4. Telescope Bracket. Two parts. 190-2000mm. Two fixing points to ceiling
5. Threaded Rod. One or two fixing points to ceiling. Comes in two lengths. Cut to length at installation site.

Article no.	
1109695	Ceiling bracket set 40 mm
1109700	Telescope Thread 80-125mm
1109710	Telescope Thread 120-200mm
1109715	Telescope 190-250mm
1109718	Telescope 240-350mm
1109720	Telescope 340-550mm
1109725	Telescope 540-900mm
1109730	Telescope 890-1300mm
1109735	Telescope 1290-2000mm
1109910	M10 Threaded Rod w/Bracket Set 1 Meter
1109912	M10 Threaded Rod w/Bracket Set 2 Meter

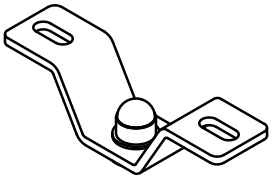

2. Bracket 40mm

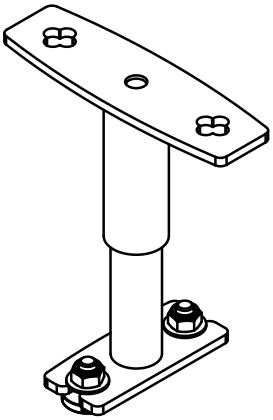

3. Telescope Thread 80-200mm

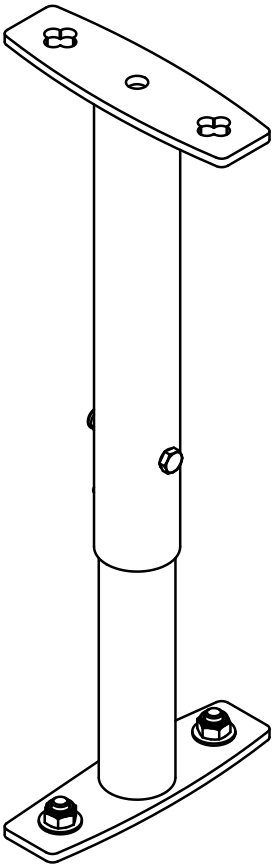

4. Telescope 190-2000mm

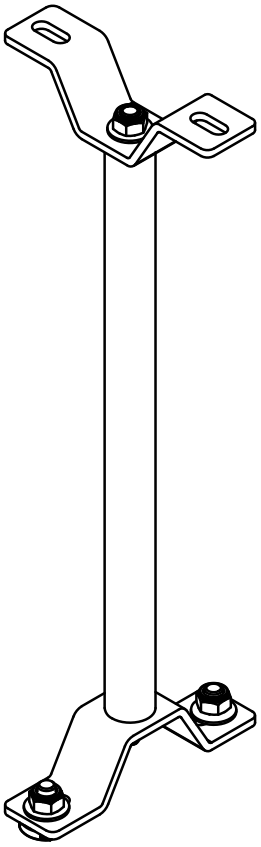

5. Threaded Rod 100-2000mm

Bracing Side supports

Rails systems mounted with attachments like Telescope brackets and Threaded rods need bracing in form of Side supports to eliminate horizontal forces and vibrations. (Design and positioning of Side support see chapter 5.2.4)

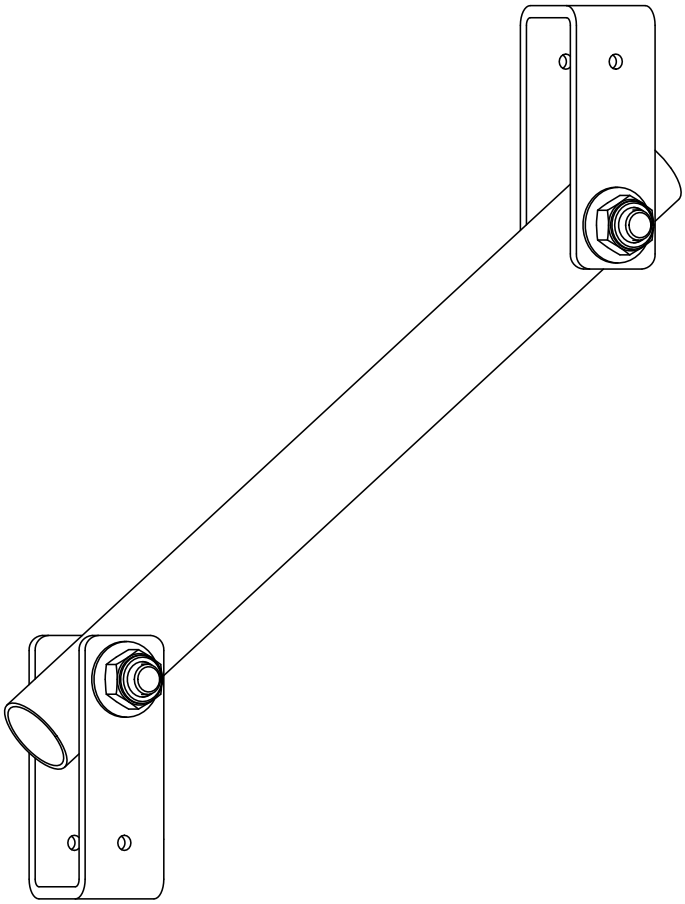

Support for Telescope or Threaded rod Ceiling Bracket, for mounting in rail.

Article no.

1109920	M10 Support Set 1 Meter
1109922	M10 Support Set 2 Meter
1109950	3/8" Support Set 36"
1109952	3/8" Support Set 72"

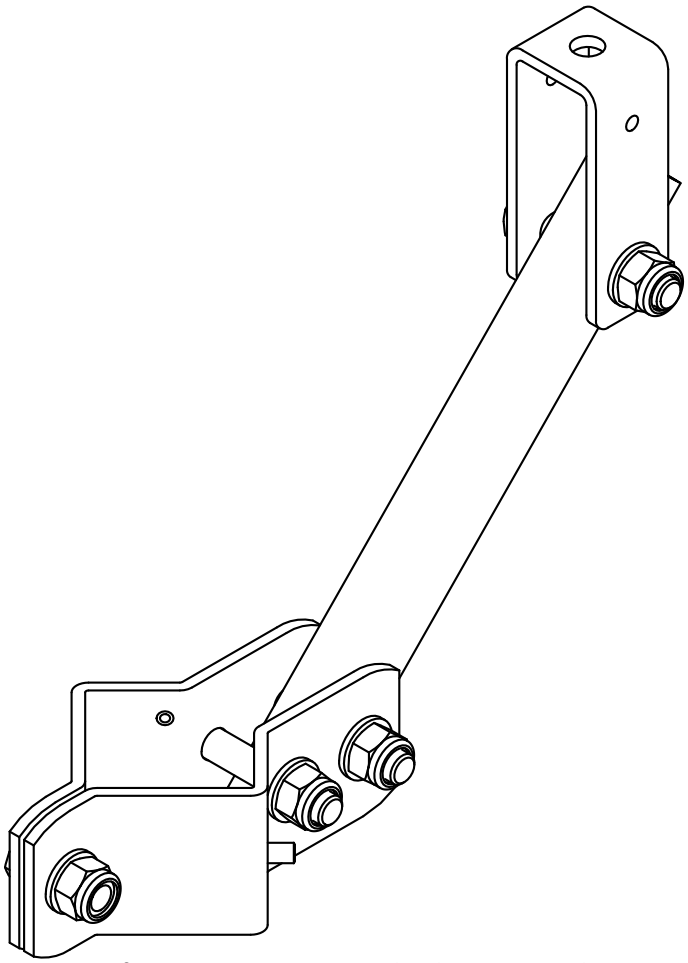

Support for mounting around telescope ceiling bracket.

Article no.

1109815	Side Support unit for Telescope Brackets

4.1.2 Wall mounted System

Wall mounting bracket is versatile and can be mounted in different ways.

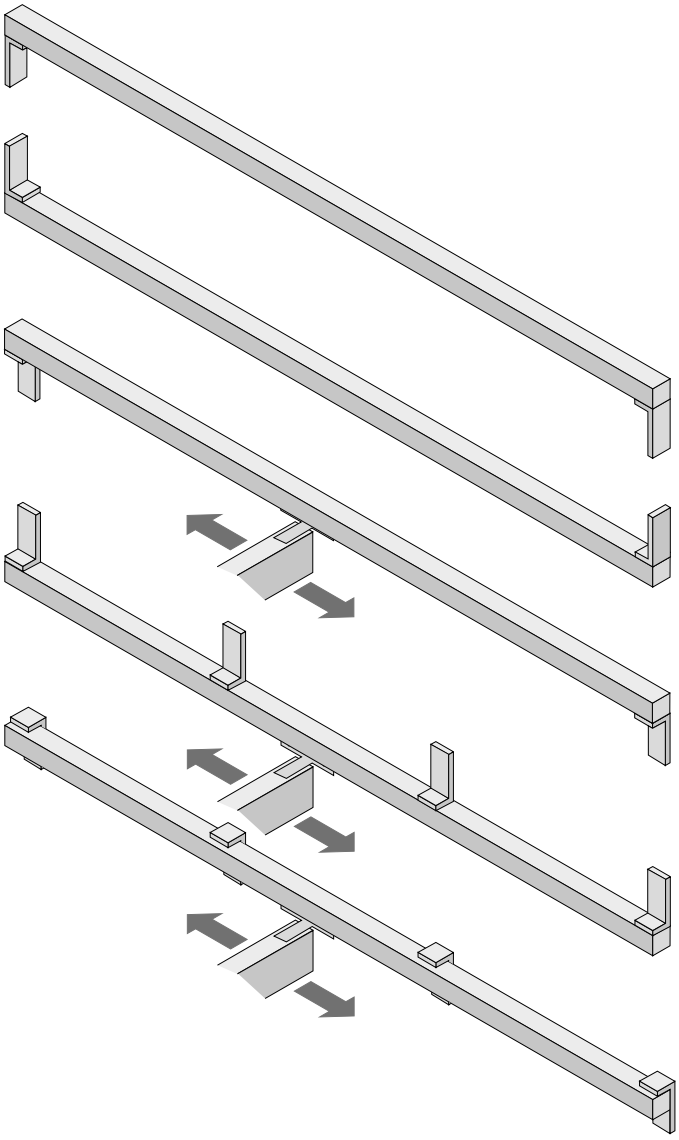

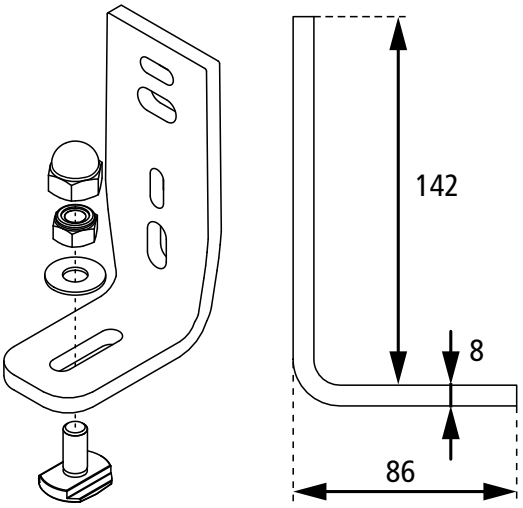

Article no.

1109259	Wall bracket with multibolt, white
1109269	Wall bracket with multibolt, anodized

Wall rail

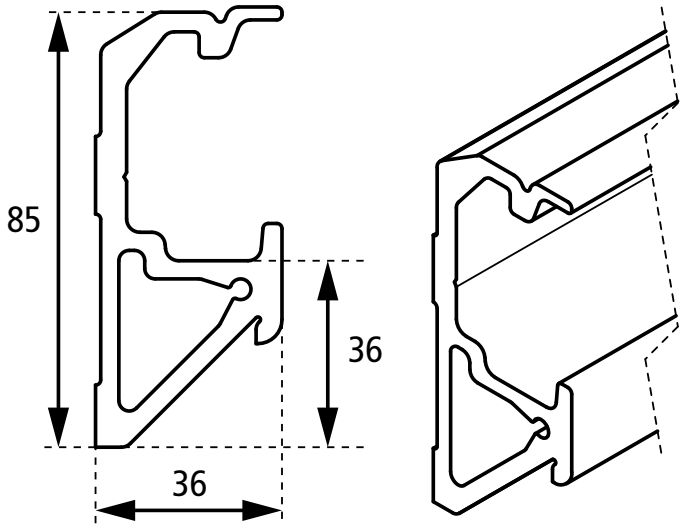

Article no.

1109160	Rail H85 W/A 6m-length painted

Upright Support

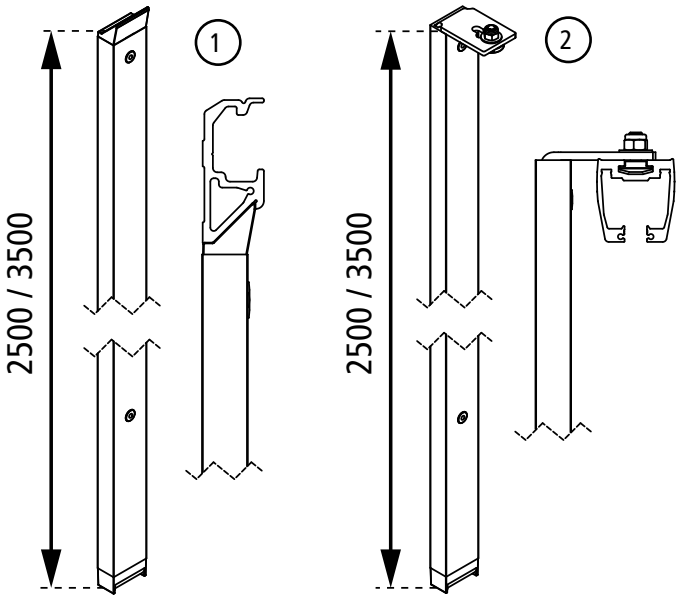

Article no.

Pos.	Article no.	
1	1109210	Wall support W-rail L=2500mmm
1	1109215	Wall support W-rail L=3500mmm
2	1109220	Wall support OC-rail L=2500mmm
2	1109225	Wall support OC-rail L=3500mmm

4.2 Rails and Curves

Rails

MRS rail program consists of 4 different profiles (CC, OC, DC or W) where OC profile is available in 3 different heights. The figures give the height of the rail in mm. The strength of the rail relates to the height. Higher profile gives stronger rail. All profiles are compatible with all combinations of the MRS products.

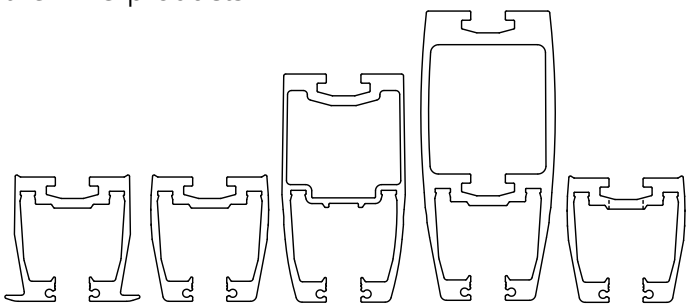

All rails are extruded Aluminum and comes in two colours, anodized aluminum and white paint. The H62 rail comes in 3 different versions, CC for recessed rails flush to false ceiling, DC for direct mounting in ceiling, and OC for suspended rails from bearing ceiling.Delivered in standard lengths or Tailor made lengths up to 7,0m.

Curves

Rail curves are available for all three H62 profiles and come as standard in 30, 45, 60 and 90 degrees angle. Tailor made curves are possible as well as tailor made lengths. All curves have radius 550mm. Standard length is 1000mm.

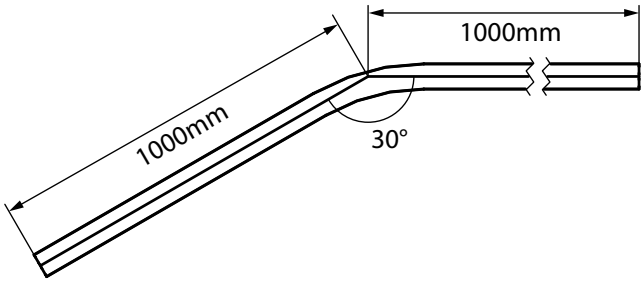

Curve 30°

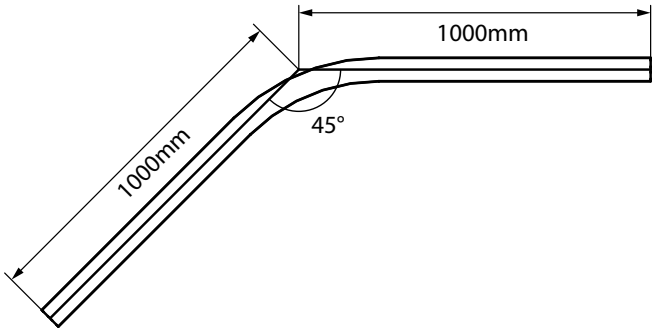

Curve 45°

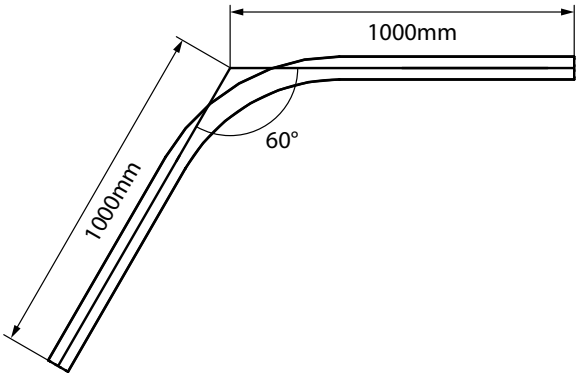

Curve 60°

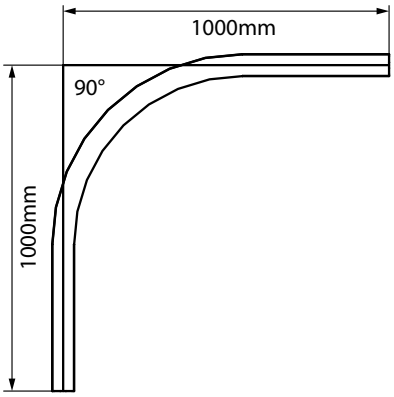

Curve 90°

Special Curve CC/DC/OC

Tailor made curve angles can be ordered. Use part no. 1109150 for special curves in Rail H62 profile and specify the colour (P or A) and following measurements when ordering:

A= 0 – 2000mm : _____
B= 0 – 2000mm : _____
C= 0-90° : _____

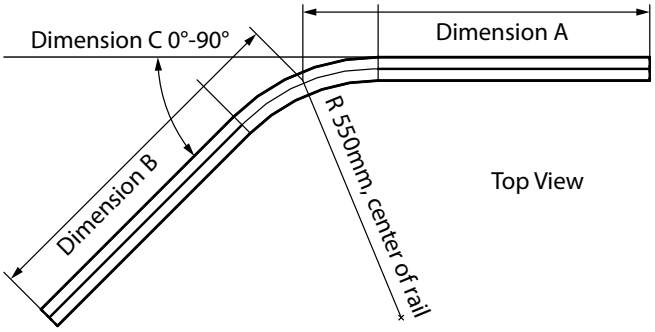

	Rail profile			Surface treatment	
	Height	Profile	Length or Curve	Anodized (article no.)	Painted (article no.)
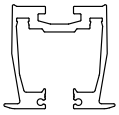	H62	CC	6m	1109000-6m	1109001-6m
	H62	CC	7m	1109000-7m	1109001-7m
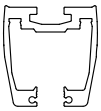	H62	OC	6m	1109002-6m	1109003-6m
	H62	OC	7m	1109002-7m	1109003-7m
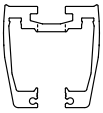	H62	DC	6m	1109004-6m	1109005-6m
	H62	DC	7m	1109004-7m	1109005-7m
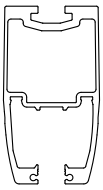	H112	OC	4m	1109008-4m	1109009-4m
	H112	OC	5m	1109008-5m	1109009-5m
	H112	OC	6m	1109008-6m	1109009-6m
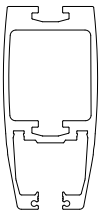	H142	OC	5m	1109010-5m	1109011-5m
	H142	OC	6m	1109010-6m	1109011-6m
	H142	OC	7m	1109010-7m	1109011-7m
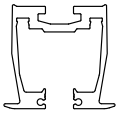	H62	CC	30°	1109100	1109105
	H62	CC	45°	1109101	1109106
	H62	CC	60°	1109102	1109107
	H62	CC	90°	1109103	1109108
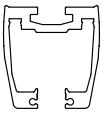	H62	OC	30°	1109130	1109135
	H62	OC	45°	1109131	1109136
	H62	OC	60°	1109132	1109137
	H62	OC	90°	1109133	1109138
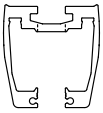	H62	DC	30°	1109140	1109145
	H62	DC	45°	1109141	1109146
	H62	DC	60°	1109142	1109147
	H62	DC	90°	1109143	1109148
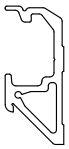	H85	W	6m	N/A	1109160

Rail profile

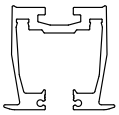

CC = Rail to be built into closed ceiling

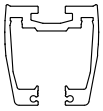

OC = Rail for open ceiling / and mounting in rafters

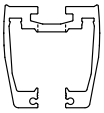

DC = Rail to be mounted directly in concrete ceiling

W = Rail for traverese system, to be mounted directly on wall

Height of rail

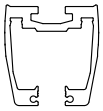

H62 OC = 62 mm

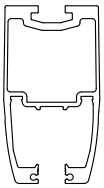

H112 OC = 112 mm

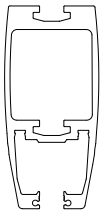

H142 OC = 142 mm

Surface treatment

Anodized = Matte alloy
Painted = White

4.3 End Stops and End Caps

End Stops

End stop is an important safety detail for all Overhead systems. All rail ends must have an End stop to prevent trolleys from going out of the rail. The end stop can also be used to limit the range of lifting area.

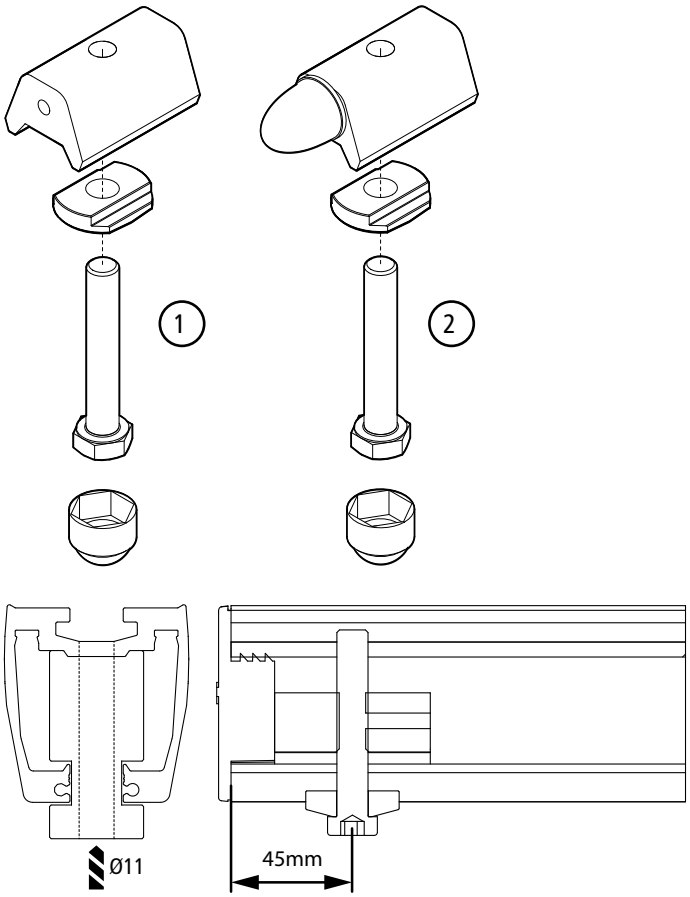

Use drill guide 1109998 to mount end stop.

Pos.	Article no.	
1	1109410	End stop for motor trolley
2	1109411	End stop for traverse trolley

Check to ensure that the end stops are assembled into all rail ends in the overhead system.

End caps

Plastic caps for covering rail ends. Comes in two colours for all three different rail heights, grey and white. (for combination with anodized or white rails)

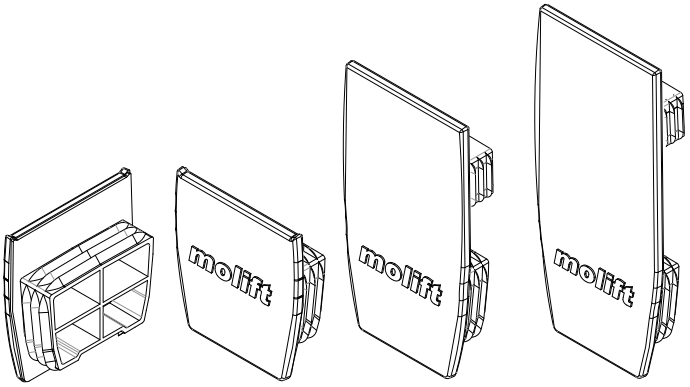

Article no.

1109320	End Cap Rail H62 Grey
1109321	End Cap Rail H12 Grey
1109322	End Cap Rail H142 Grey
1109340	End Cap Rail H62 White
1109341	End Cap Rail H112 White
1109342	End Cap Rail H142 White

White plastic sleeve

To be used as cover on tube 1120317 for threaded rod system when going through false ceiling.

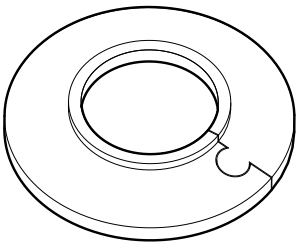

Article no.

1120338	Sleeve LKF62/28,5/7 White

4.4 Traverse Trolleys

Traverse trolleys

MRS Traverse trolleys are used in all traverse systems which uses H-profile as primary rails. Comes in two versions, Standard and lowered 50mm. Delivered in a complete set with two trolleys.

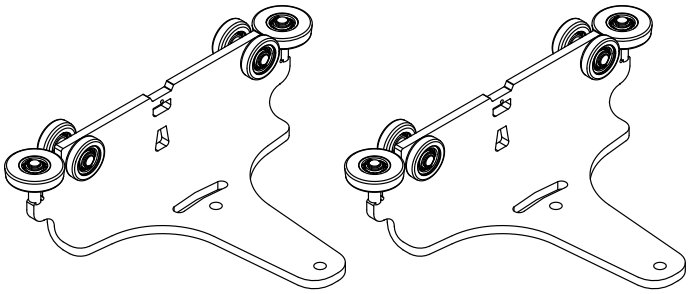

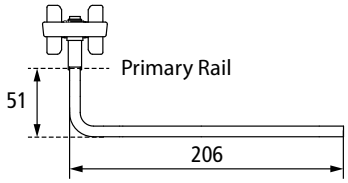

Article no.

1109550	Traverse trolley set (grey)
1109590	Traverse trolley set (white)
1109551	Traverse trolley set IRC (grey)
1109591	Traverse trolley set IRC (white)

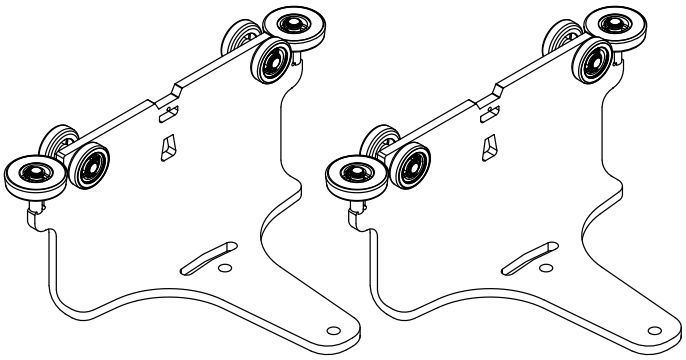

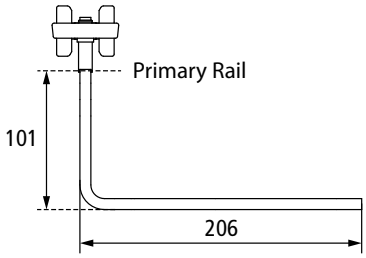

Article no.

1109570	Traverse trolley set 50mm+ (grey)
1109580	Traverse trolley set 50mm+ (white)
1109571	Traverse trolley set IRC 50mm+ (grey)
1109581	Traverse trolley set IRC 50mm+ (white)

Traverse Mounting kit

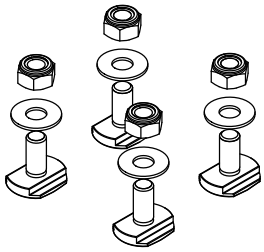

Article no.

1109345	Traverse mounting kit (under trolleys)

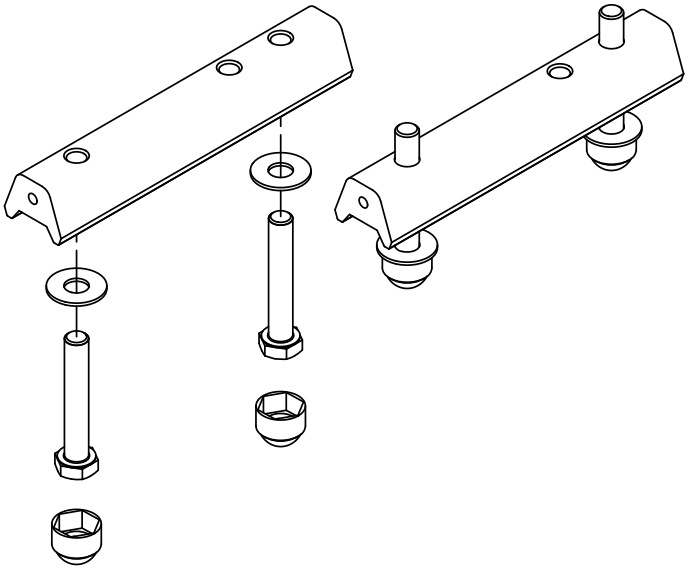

Article no.

1109353	Traverse mounting kit (between primary rail)

Traverse Trolley for Wall rail

Traverse Trolley for Wall Rail (Includes end stops)

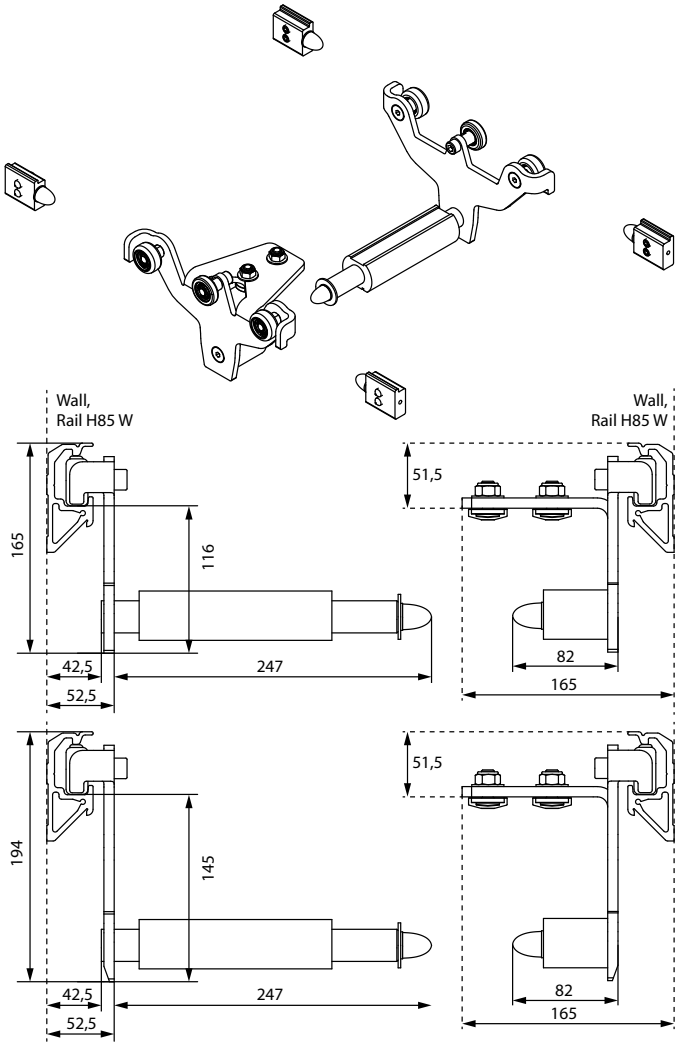

Article no.

1109163	Wall mounted traverse trolley set RH112
1109166	Wall mounted traverse trolley set RH142

4.5 Lift Motor Trolleys

Lift motor trolleys are available in various versions for Molift AIR and Molift Nomad. All motor trolleys are compatible with all rail profiles and all combinations of MRS products.

Molift AIR

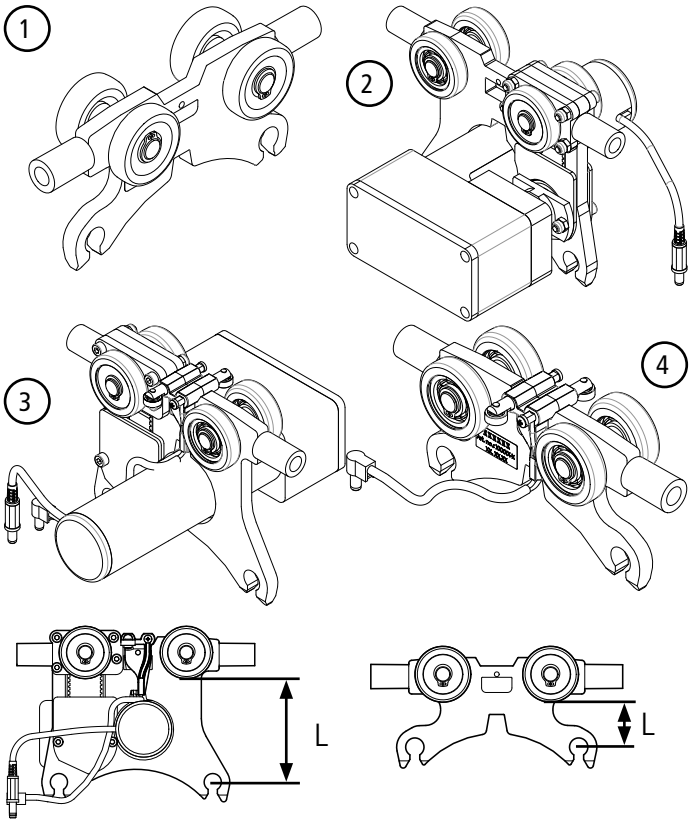

Pos.	Article no.		L
1	2520000	Basic Trolley	29,6
2	2500103	Trolley Propulsion	72,6
3	2520006	Trolley IRC Propulsion	72,6
4	2520002	Trolley IRC	29,6
			All measurements in mm.

Molift Nomad

Trolley for Molift Nomad

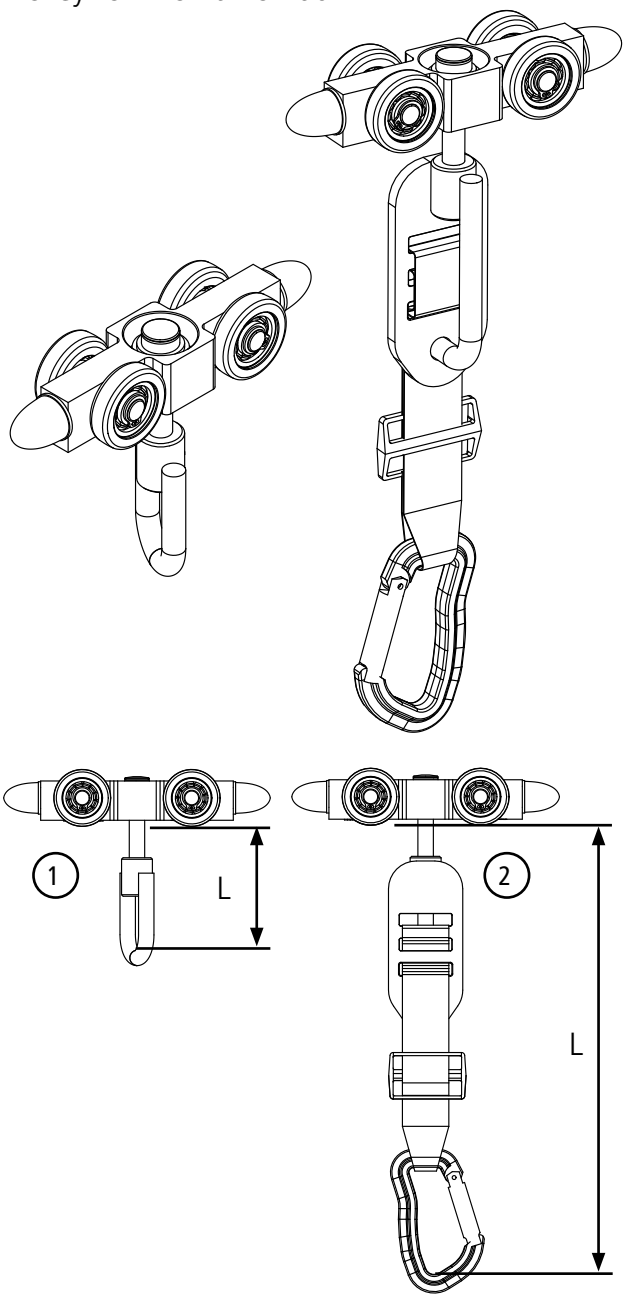

Pos.	Article no.		L
1	1109109	Trolley Molift Nomad w brake, MRS	80
2	1109112	Trolley Molift Nomad for climbing w brake, MRS	295
			All measurements in mm.

4.6 Switches

Molift Rail System has 2 different options of switching direction within the MRS range.

Rail Switch

For Single rails, switching direction from straight rail to curve etc. Manually controlled.

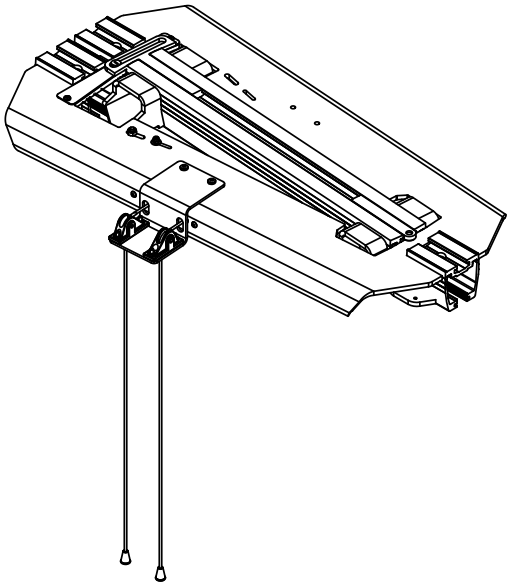

Article no.

1109015	Switch MRS (grey)
1109066	Switch MRS (white)
1109085	Set of covers for OC rail switch (grey)
1109086	Set of covers for OC rail switch (white)
1109077	Set of covers for CC rail switch (grey)
1109078	Set of covers for CC rail switch (white)

Traverse Switch

For transfer from traverse system to a fixed rail. Manually controlled.

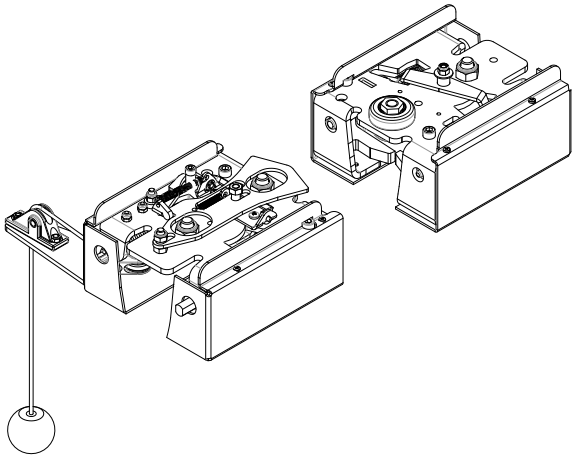

Article no.

1109029	Traverse Switch Unit (grey)
1109650	Traverse Switch Unit (white)

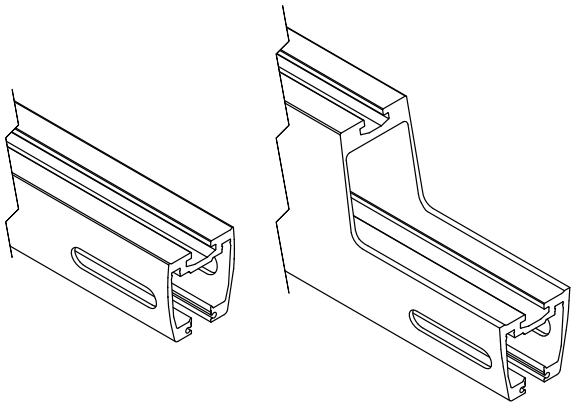

Article no.

1109602	RH62 OC/A modified for transition coupling (L=6m)
1109657	RH62 OC/P modified for transition coupling (L=6m)
1109603	RH142 OC/A modified for transition coupling (L=6m)
1109658	RH142 OC/P modified for transition coupling (L=6m)

4.7 Battery Charging

Charging

Molift Nomad and Molift AIR are charged with external charger via hand control. Molift AIR has also the option to be continues charged with In-Rail-Charging IRC.

External charging via handcontrol

Charger mounted on wall or table connected to motor with hand control

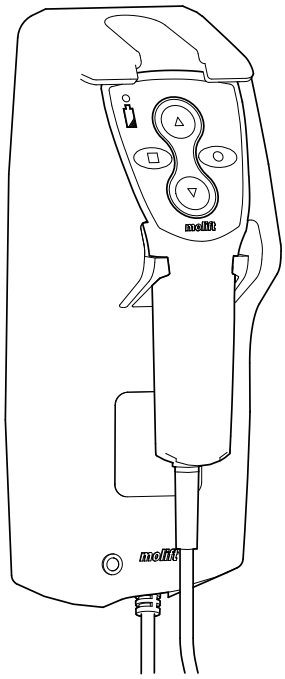

Article no.

1240100	Charger for handcontrol Nomad/AIR

In-Rail- Charging IRC

Inbuilt charger in lift motor for continuous charging through the entire rail system length. Charging is led by a charging track along the inside of the rail and by the special IRC trolley into the lift motor. Assembly of an IRC system is made during or after the overhead system installation. IRC fits both Single rail and Traverse systems.

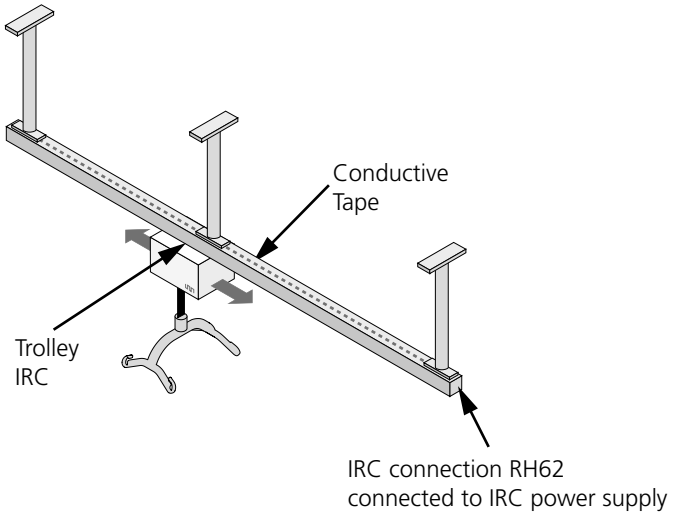

IRC Single rail system

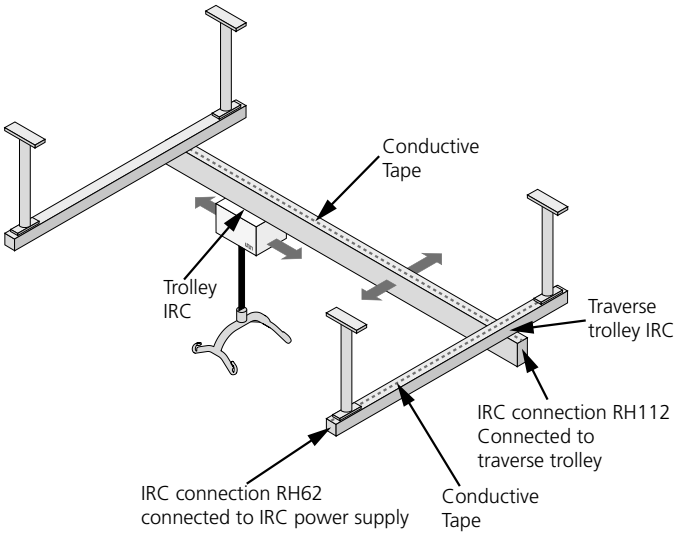

IRC Traverse system

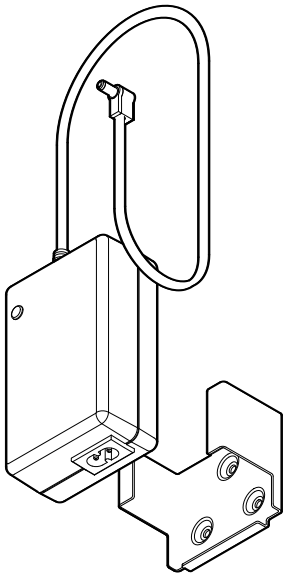

Article no.

2510090	IRC Power Supply
2510113	IRC Power Supply Cable US
2510114	IRC Power Supply Cable EU
2510115	IRC Power Supply Cable UK
2510116	IRC Power Supply Cable AU

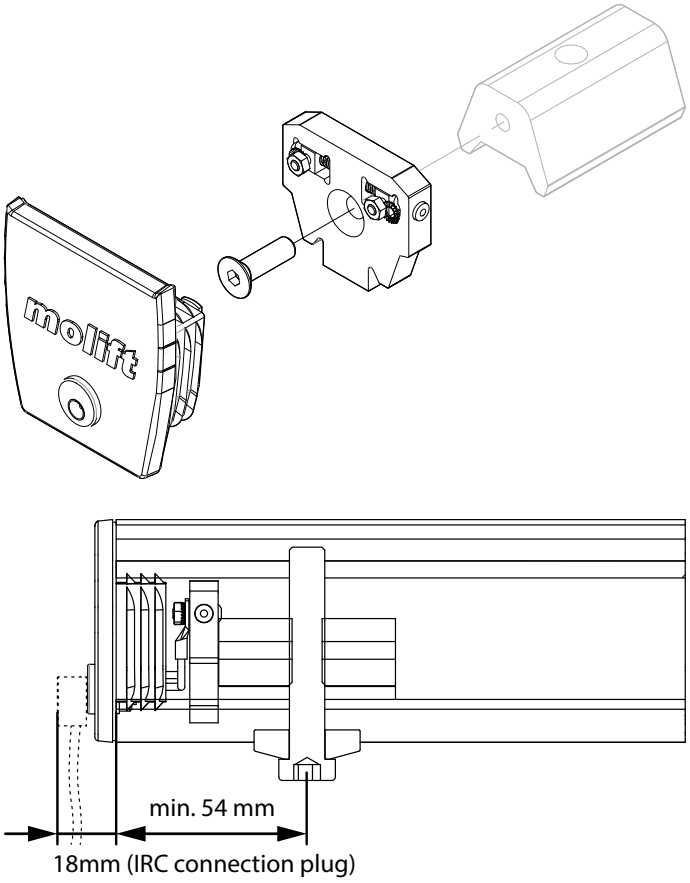

Standard end stops and traverse end stops can be modified for IRC with IRC connection.

Article no.

2510224	IRC Connection RH62 white
2510225	IRC Connection RH112 white
2510226	IRC Connection RH142 white
2510227	IRC Connection RH62 grey
2510228	IRC Connection RH112 grey
2510229	IRC Connection RH142 grey

Conductive tape Application Tool MRS

IRC Conductive tape application tool for MRS profiles

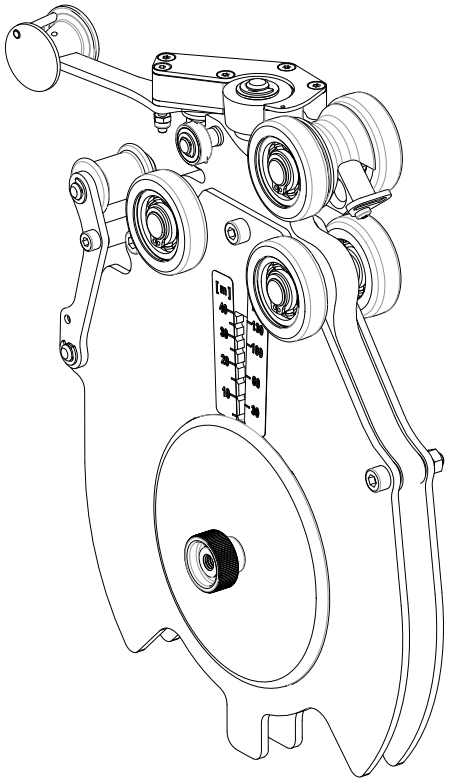

Article no.

2510125	IRC Conductive tape Application Tool MRS
2510101	IRC Conductive tape (40 m) Roll applicable for 2510125
2510102	IRC - Conductive Tape fitted to Rail NB! You need 2 m Tape per 1 m Rail

4.8 Installation tools

Drill guide

Drill guide for Direct mounting of rail in concrete Ø 8,0mm, and Drill guide for End stops Ø 11mm

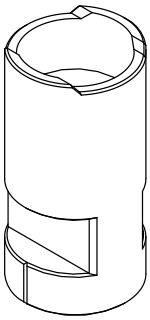

Article no.

1109999	Drill guide Ø8 mm for RH 62 DC
1109998	Drill guide Ø11 mm for endstop

Multibolt M10

Used for all connections with brackets into rail profile.

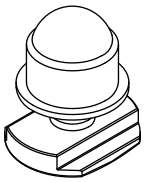

Article no.

2520221	Multibolt kit

T-Profile washer

Used for direct mounting and for all end stops

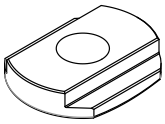

Article no.

1109307	T-Profile washer MRS

Shims

Used for support to level brackets.

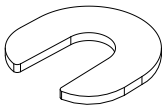

Article no.

1109312	Shims 0,5 for MRS
1109313	Shims 1,0 for MRS
1109314	Shims 2,0 for MRS

Joint set – Washer and sprints.

Used for joining rails of same profile in straight rails or curve rail system.

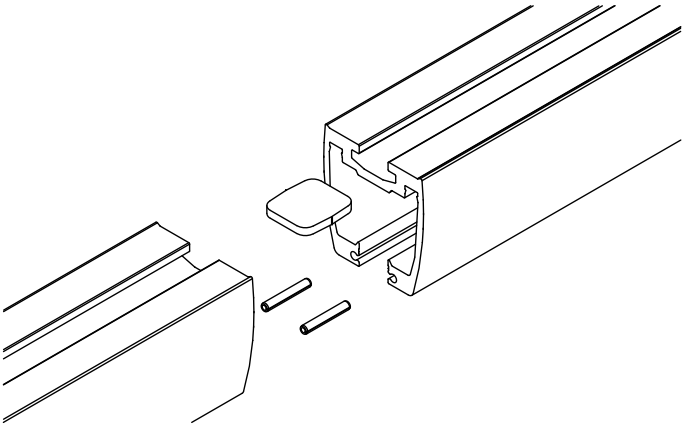

Article no.

1109350	Joint set for MRS

Mounting plate for mounting of rail switch.

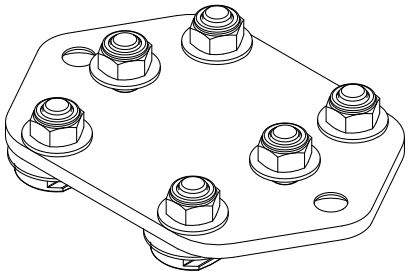

Article no.

1109090	Rail Mounting plate Assy Switch MRS

5. Design Conditions

This chapter describes the design conditions, limitations and possibilities how to combine the MRS products to create a sufficient and safe Molift Overhead System.

5.1 Lifting heights and lifting areas

Recommended heights

The Overhead system working height measures between the lower point of the rail to which the lift motor are attached (straight rail or secondary rail) and down to the floor of the room. Normally the recommendation is to position the rail from 2300mm to 4000 for a Molift AIR motor depending on the ceiling heights and lifting needs. We recommend no lower than 1800mm from the highest position of lifting point of the suspension down to the floor.

To be able to lift a person from the floor it is important that the distance from floor to lifting point of suspension does not exceed 400 mm when the suspension is at its lowest point as picture shows. The flexibility of MRS and Molift AIR allows walking training as well as normal patient transfers within these heights.

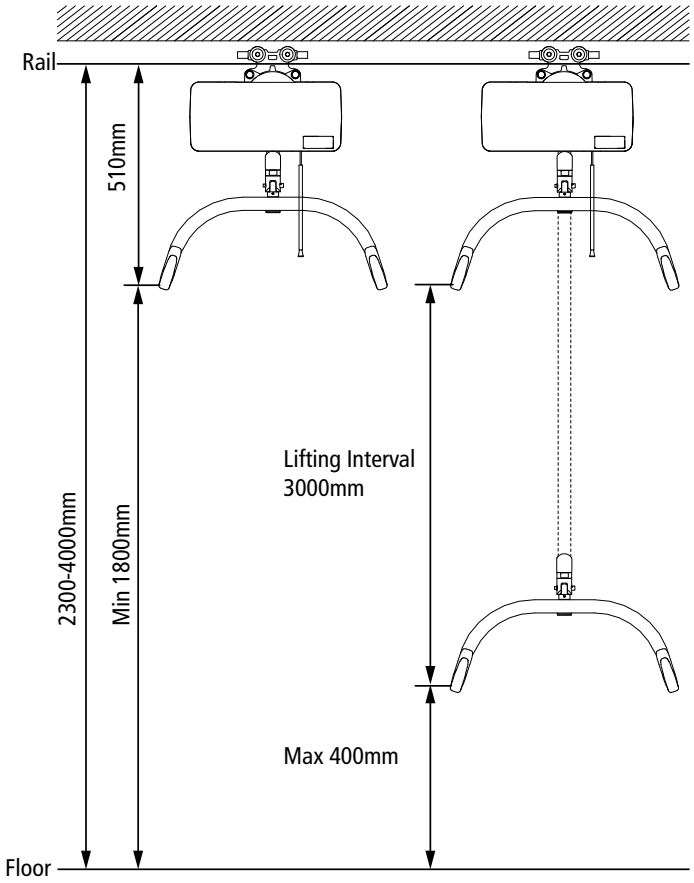

Molift AIR
(4-point Medium suspension)

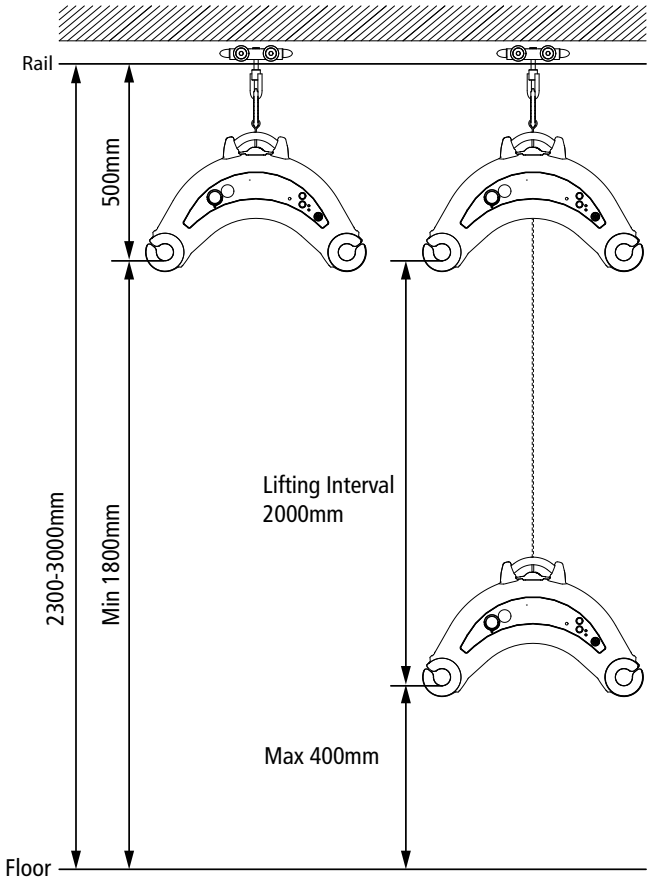

Molift Nomad

Lifting area limitations

An Overhead system covers a certain maximum lifting area in a room. Due to the practical installation work and measurements of including parts, a rail system cannot be mounted directly close to the walls. There a few things to consider, the minimum space between a rail and the wall, the lengths of end stops, trolleys and lift motor.

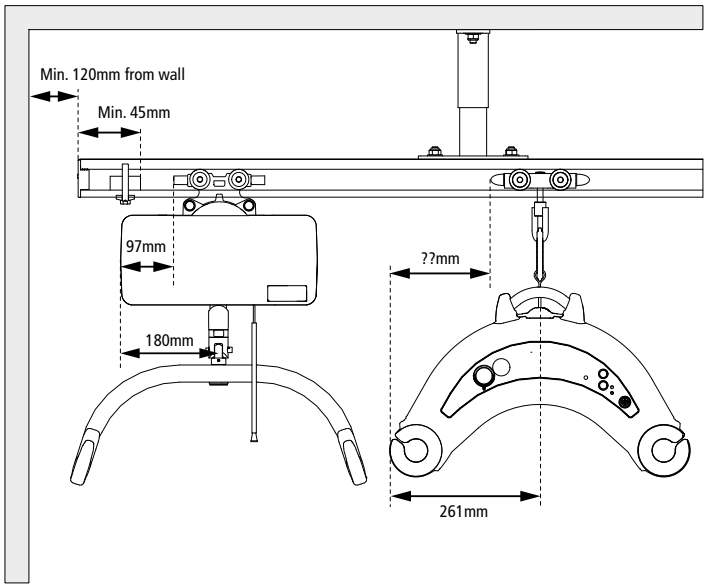

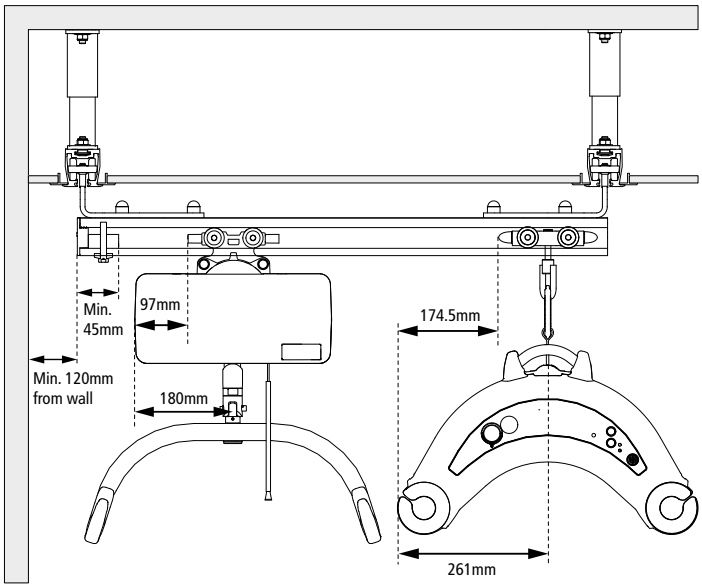

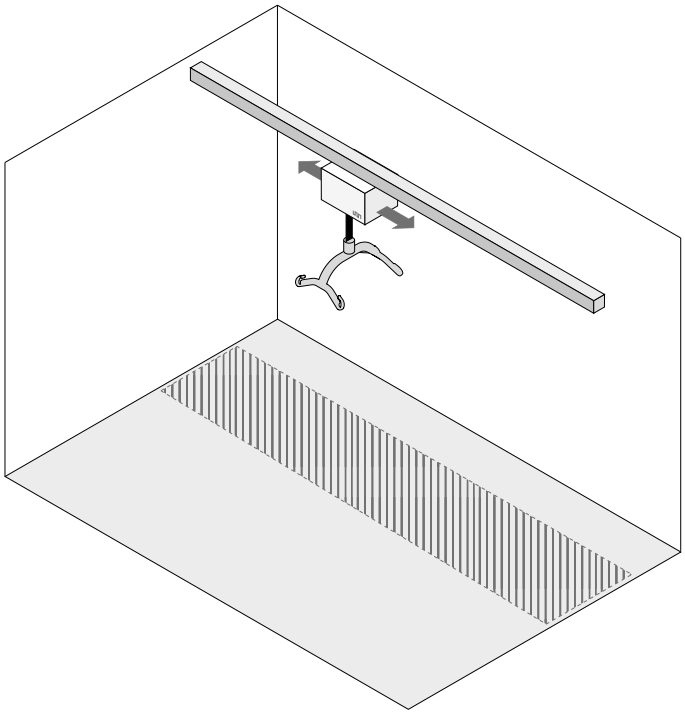

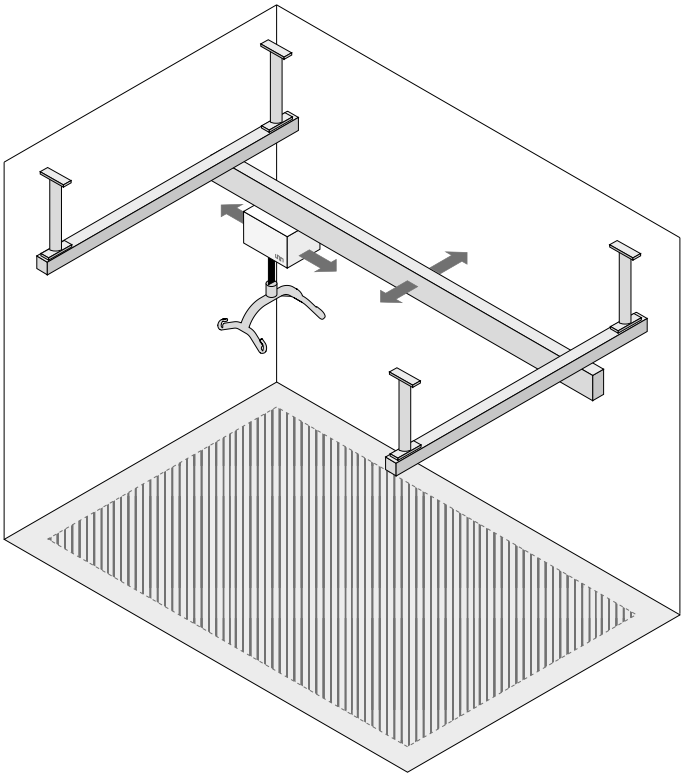

Lifting Area = Hatched area on floor under lifter.

5.2 Design conditions – Attachments

Maximum distances between attachments to fulfill maximum deflection requirements according to ISO standard 10535 (<1mm per 200mm rail length). Depending on Safe Working load SWL and rail profile.

5.2.1 Ceiling mounted

A - Maximum distance between attachments (Including distance between primary rails in traverse systems)
B - Maximum distance from last attachment to end of rail (Free end/Overhang)

Safe Working Load (SWL)	Rail profile	A - Max distance	B - Max distance
SWL 160 kg	Rail H62 CC	2200 mm	400 mm
	Rail H62 OC	2200 mm	400 mm
	Rail H62 DC	1200 mm	50 mm
	Rail H112 OC	4800 mm	550 mm
	Rail H142 OC	6000 mm	700 mm
	Rail H85 W	1500 mm	250 mm
SWL 205 kg	Rail H62 CC	2000 mm	400 mm
	Rail H62 OC	2000 mm	400 mm
	Rail H62 DC	900 mm	50 mm
	Rail H112 OC	4200 mm	500 mm
	Rail H142 OC	6000 mm	650 mm
	Rail H85 W	1400 mm	225 mm
SWL 230 kg	Rail H62 CC	1800 mm	400 mm
	Rail H62 OC	1800 mm	400 mm
	Rail H62 DC	600 mm	50 mm
	Rail H112 OC	3900 mm	500 mm
	Rail H142 OC	6000 mm	600 mm
	Rail H85 W	1300 mm	200 mm
SWL 255 kg	Rail H62 CC	1700 mm	375 mm
	Rail H62 OC	1700 mm	375 mm
	Rail H62 DC	300 mm	50 mm
	Rail H112 OC	3800 mm	500 mm
	Rail H142 OC	5700 mm	600 mm
	Rail H85 W	1250 mm	175 mm
SWL 300 kg	Rail H62 CC	1600 mm	375 mm
	Rail H62 OC	1600 mm	375 mm
	Rail H62 DC	300 mm	50 mm
	Rail H112 OC	3500 mm	450 mm
	Rail H142 OC	5300 mm	550 mm
	Rail H85 W	1200 mm	150 mm

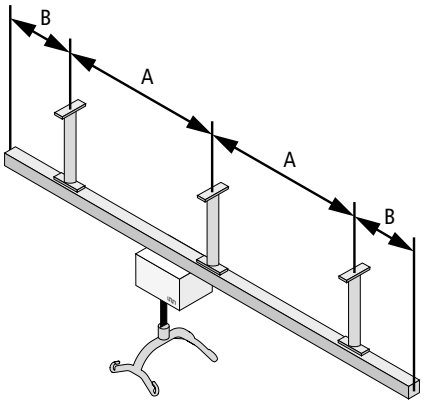

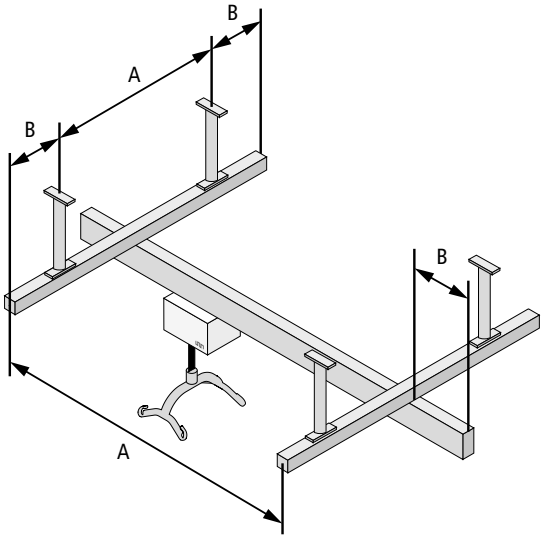

5.2.2 Wall mounted

A - Maximum distance between attachments (Including distance between primary rails in traverse systems)
B - Maximum distance from last attachment to end of rail (Free end/Overhang)

Safe Working Load (SWL)	Rail profile	A - Max distance	B - Max distance
SWL 160 kg	Rail H62 CC	2200 mm	400 mm
	Rail H62 OC	2200 mm	400 mm
	Rail H62 DC	1200 mm	50 mm
	Rail H112 OC	4800 mm	550 mm
	Rail H142 OC	6000 mm	700 mm
	Rail H85 W	1500 mm	250 mm
SWL 205 kg	Rail H62 CC	2000 mm	400 mm
	Rail H62 OC	2000 mm	400 mm
	Rail H62 DC	900 mm	50 mm
	Rail H112 OC	4200 mm	500 mm
	Rail H142 OC	6000 mm	650 mm
	Rail H85 W	1400 mm	225 mm
SWL 230 kg	Rail H62 CC	1800 mm	400 mm
	Rail H62 OC	1800 mm	400 mm
	Rail H62 DC	600 mm	50 mm
	Rail H112 OC	3900 mm	500 mm
	Rail H142 OC	6000 mm	600 mm
	Rail H85 W	1300 mm	200 mm
SWL 255 kg	Rail H62 CC	1700 mm	375 mm
	Rail H62 OC	1700 mm	375 mm
	Rail H62 DC	300 mm	50 mm
	Rail H112 OC	3800 mm	500 mm
	Rail H142 OC	5700 mm	600 mm
	Rail H85 W	1250 mm	175 mm
SWL 300 kg	Rail H62 CC	1600 mm	375 mm
	Rail H62 OC	1600 mm	375 mm
	Rail H62 DC	300 mm	50 mm
	Rail H112 OC	3500 mm	450 mm
	Rail H142 OC	5300 mm	550 mm
	Rail H85 W	1200 mm	150 mm

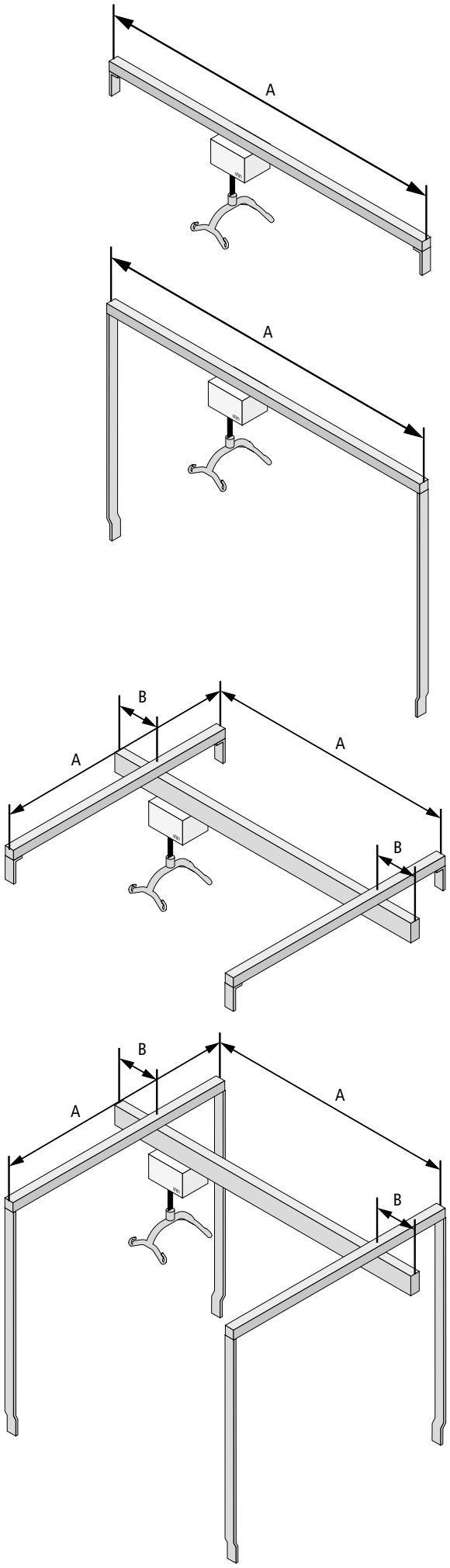

Wall mounted - Wall Rail

A - Maximum distance between wall rail attachment points or upright supports for wall rail
B - Maximum length of secondary rail
C - Maximum distance from last attachment to end of wall rail (Free end/Overhang)
D - Minimum distance from wall in one end. This distance is necessary for installing secondary rail with trolley in wall rail. Minimum distance = 350 mm

Safe Working Load (SWL)	Rail profile	A - Max distance	B - Max distance	C - Max distance
SWL 160 kg	Rail H62 CC			
	Rail H62 OC		2200	
	Rail H62 DC			
	Rail H112 OC		4800	
	Rail H142 OC		6000	
	Rail H85 W	1500		250
SWL 205 kg	Rail H62 CC			
	Rail H62 OC		2000	
	Rail H62 DC			
	Rail H112 OC		4200	
	Rail H142 OC		6000	
	Rail H85 W	1400		225
SWL 230 kg	Rail H62 CC			
	Rail H62 OC		1800	
	Rail H62 DC			
	Rail H112 OC		3900	
	Rail H142 OC		6000	
	Rail H85 W	1300		200
SWL 255 kg	Rail H62 CC			
	Rail H62 OC		1700	
	Rail H62 DC			
	Rail H112 OC		3800	
	Rail H142 OC		5700	
	Rail H85 W	1250		175
SWL 300 kg	Rail H62 CC			
	Rail H62 OC		1600	
	Rail H62 DC			
	Rail H112 OC		3500	
	Rail H142 OC		5300	
	Rail H85 W	1200		150
All measurements in mm				

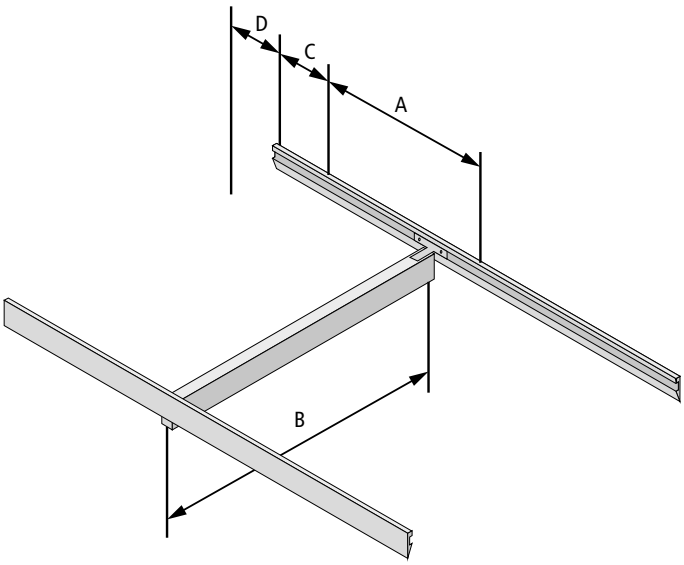

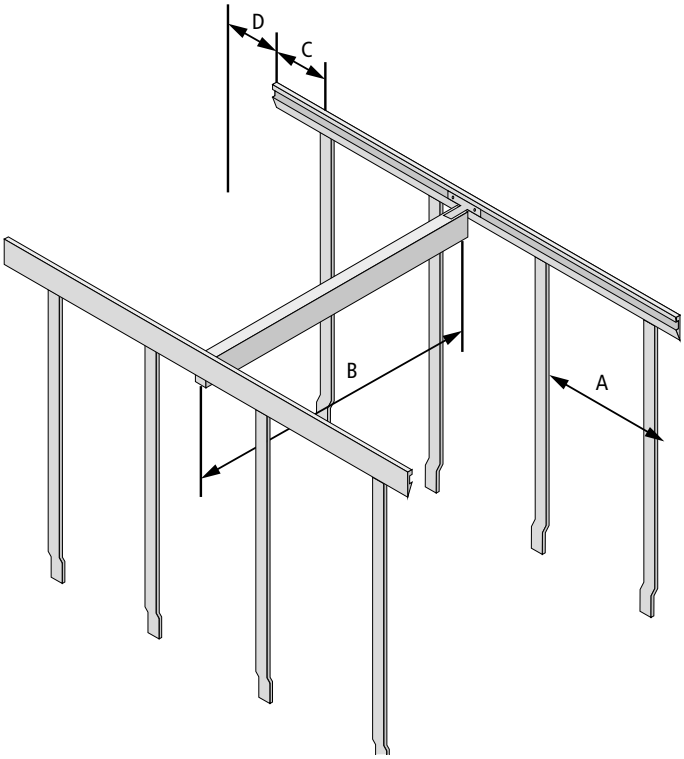

Secondary rail length

Length of Secondary rail (B) is determined by distance between primary rails (A) in a box-in-system, or the distance between the wall rails (C) for a wall mounted system.

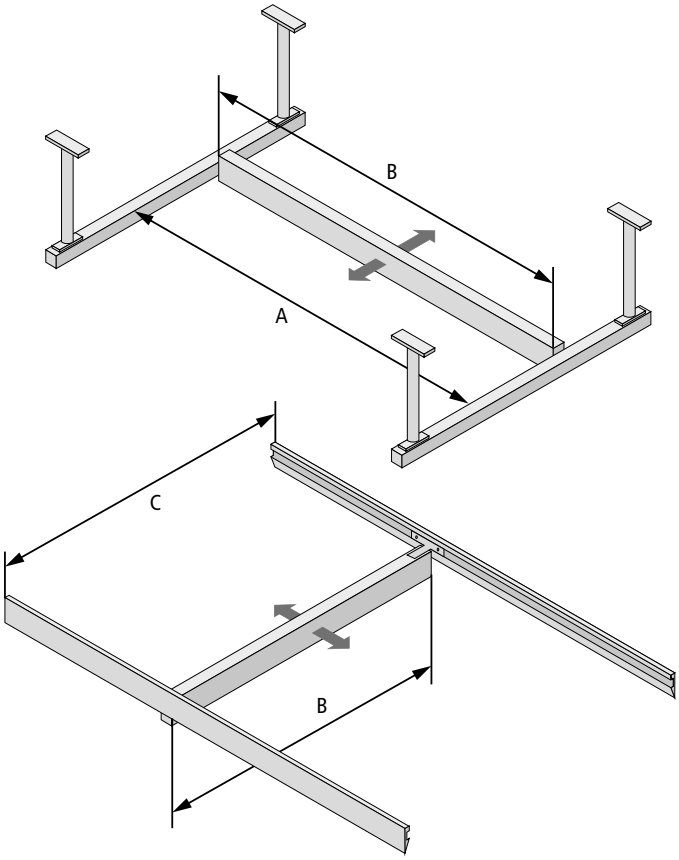

Figure: Secondary rail (B) length
Box in system: Approx 30mm shorter than (A)
Wall rail system: Approx 130mm shorter than (C)

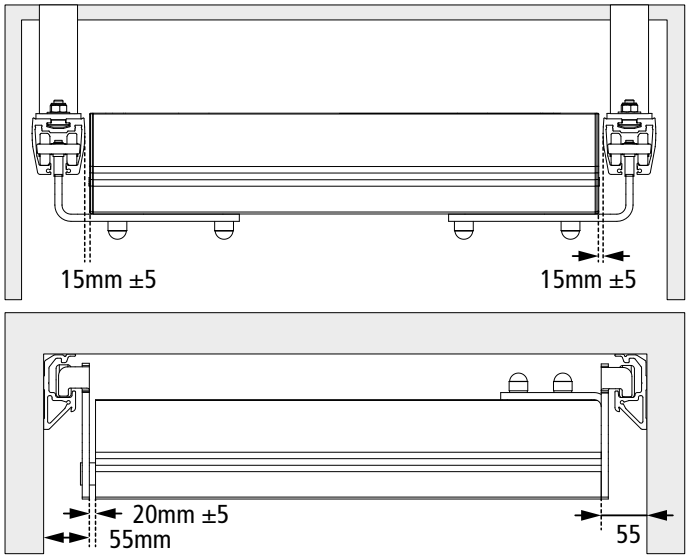

Figure: Distances between Secondary and Primary rail.

5.2.3 Attachments for curves

Rail curves are only possible for ceiling mounting. Minimum requirements:

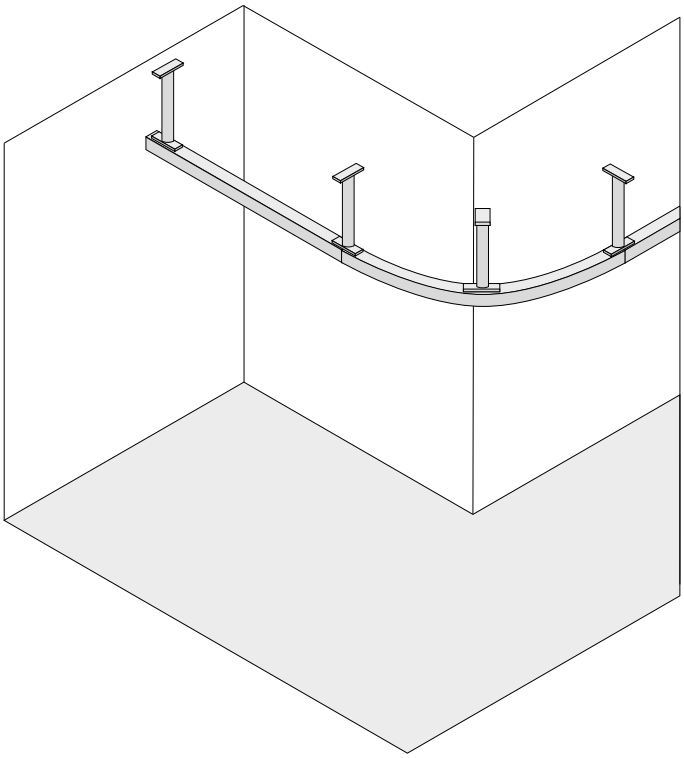

Figure: Minimum three attachments must be mounted. One in each joint section and one in center of curve radius.

For joining curves with other rails of same profile a Joint Set is used.

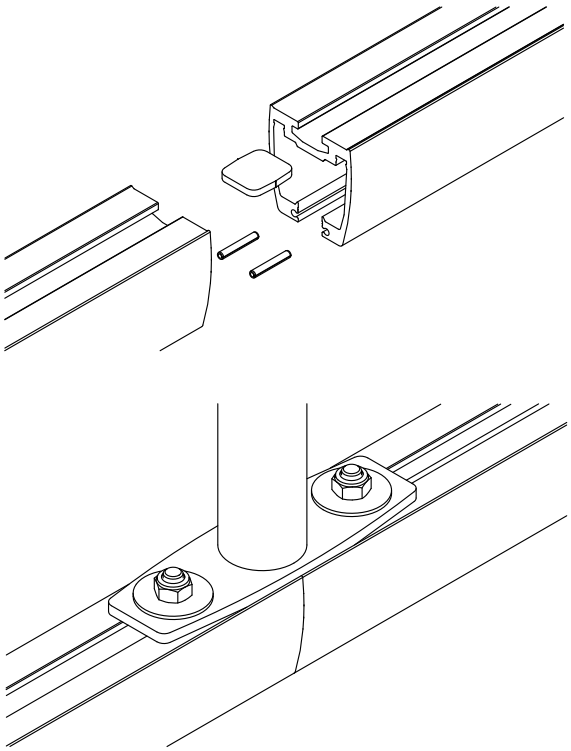

Figure: Joint set and bracket mounting.

5.2.4 Side Support positioning

Bracing with side supports is needed to give stability to ceiling mounted Overhead systems depending on bracket lengths.

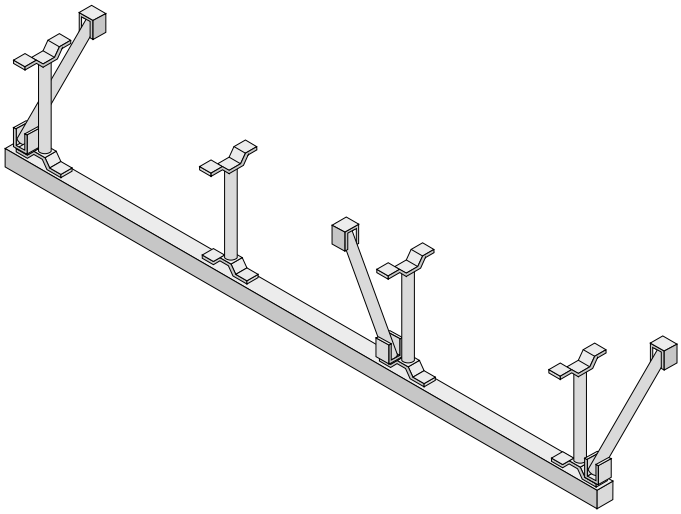

Telescope Brackets

Straight rail and Traverse systems

Length of bracket < 800 mm, (< 32 inch.):
No need of side supports.

Length of bracket 800 > 1500 mm, (32 > 60 inch.):
Side supports should be mounted to the first and the last bracket and in between those to every third bracket, positioned perpendicular to the rail in a Straight rail system and to both primary rails in a Traverse system.

One Side support should be mounted to the first or last pendant, positioned parallel to the rail in a Straight rail system and to both the primary rails in a Traverse system.

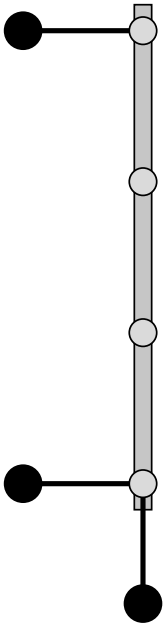

Straight Rail System

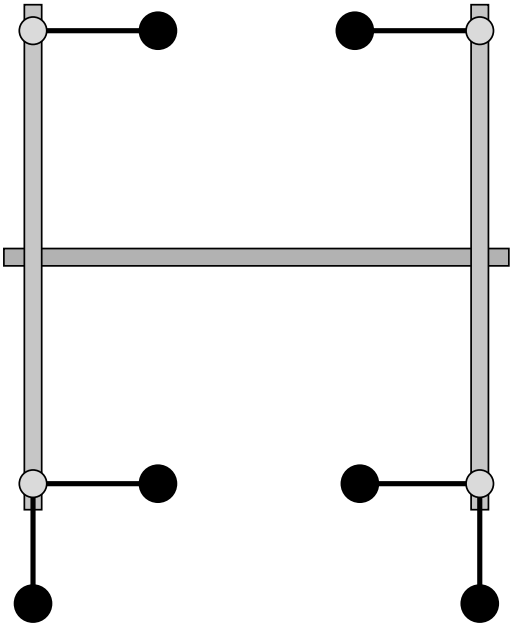

Traverse System

Length of bracket > 1500 mm (> 60 inch.):

Side support should be mounted to all brackets positioned perpendicular to the rail in a Straight rail system and to both primary rails in a Traverse system.

Side support should be mounted to the first and last bracket positioned parallel to the rail in a Straight rail system. Traverse Systems need one Side support parallel to each Primary rail end.

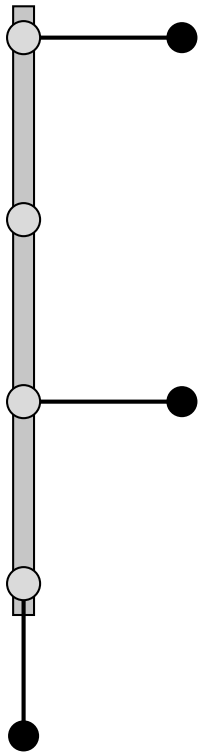

Straight Rail System

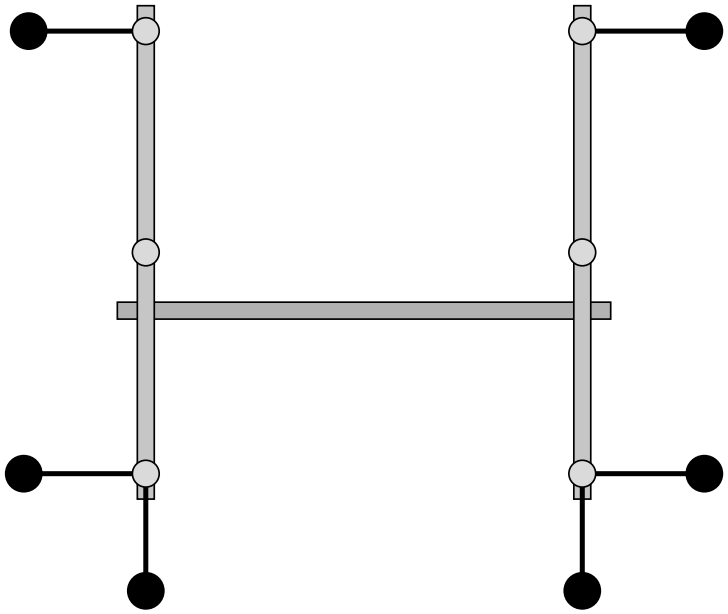

Traverse System

Rail Curves – includes all angles 30°to 90°

Length of bracket < 800 mm (< 32 inch.):
No need of side supports.

Length of bracket > 800 mm (> 32 inch.):
One side support should be mounted to the bracket in the middle of the curve perpendicular to the radius.

Rules for Side support for the joining rails, see above.

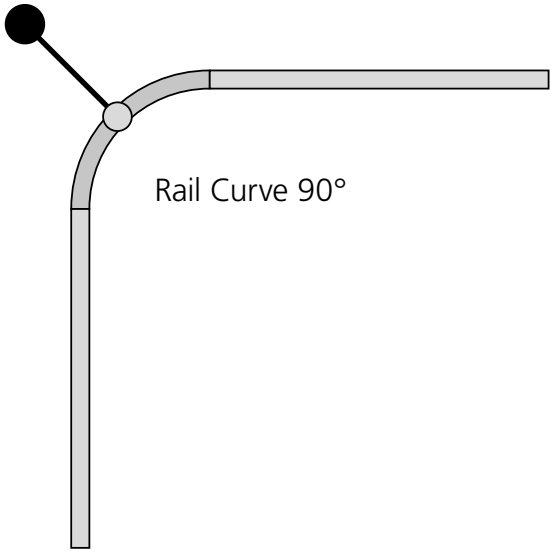

Rail Switches

Length of bracket < 400 mm (< 16 inch.):
No need of side supports.

Length of bracket > 400 mm (> 16 inch.):
All switch functions need minimum two side supports perpendicular to each other mounted on the closest bracket.

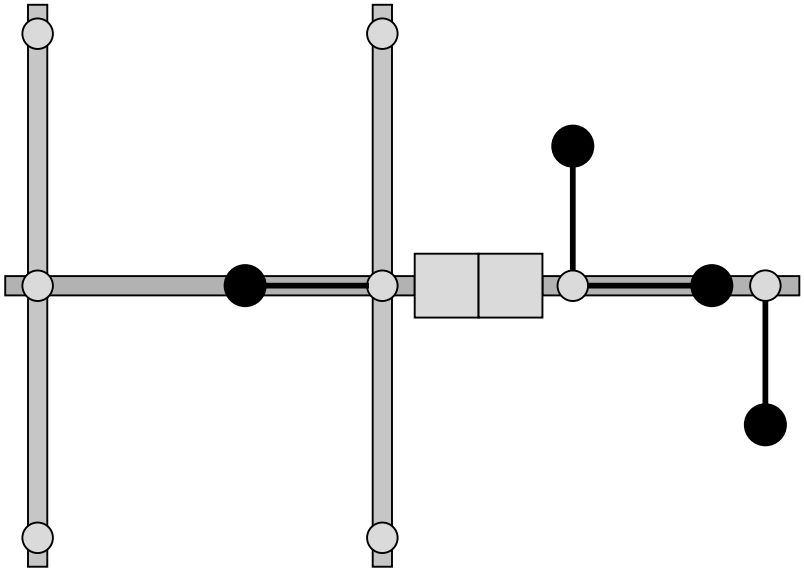

Traverse Switch

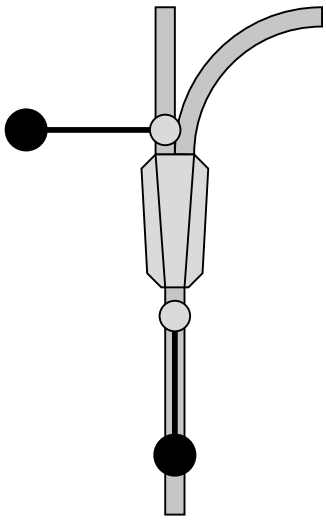

Side rail switch

Threaded rod installation

Straight rail and Traverse systems:

All threaded rod systems should have bracing independent of length of rod. i.e. 100-2000mm

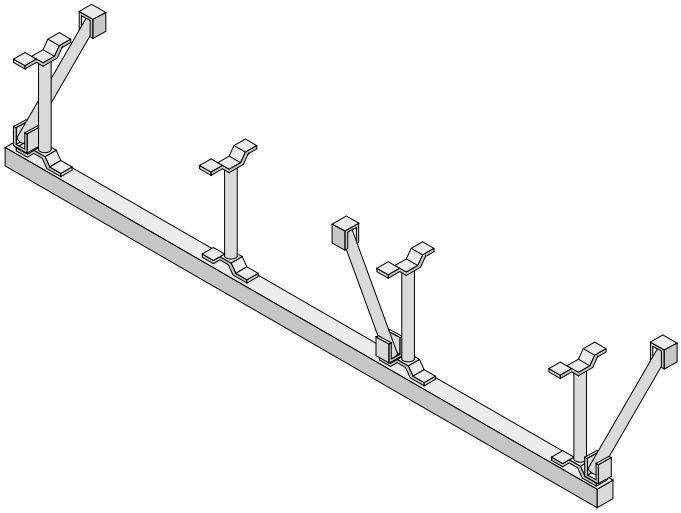

Side support should be mounted to all rods, positioned perpendicular to the rail in a Straight rail system and to both primary rails in a Traverse system.

Side support should be mounted to the first and last rods positioned parallel to the rail in a Straight rail system. Traverse Systems need one Side support parallel to each Primary rail end.

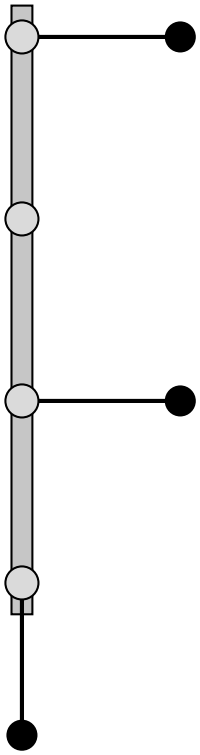

Straight Rail System

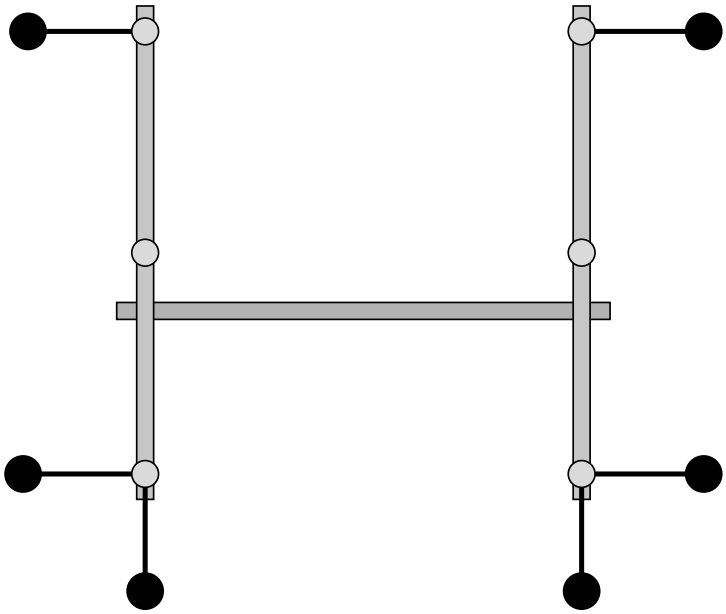

Traverse System

Rail Curves – includes all angles 30° to 90°

Length of bracket < 800 mm (< 32 inch.):
No need of side supports.

Length of bracket > 800 mm (> 32 inch.)
One side support should be mounted to the rod in the middle of the curve perpendicular to the radius.

Rules for Side support for the joining rails, see above.

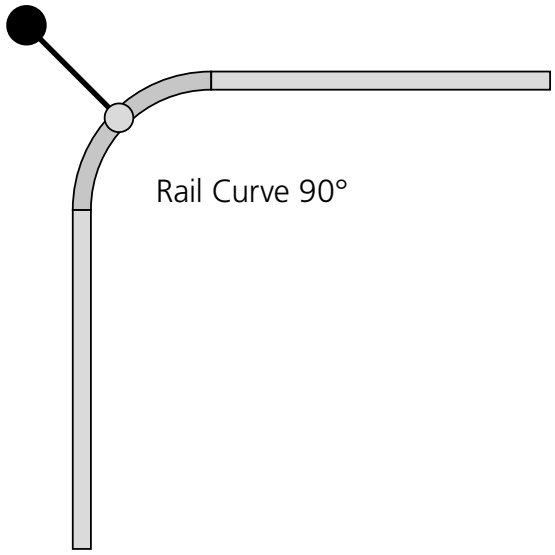

Rail Curve 90°

Rail Switches

Regardless of the lengths of Threaded rods, all switches need minimum two side supports perpendicular to each other mounted on the closest rod.

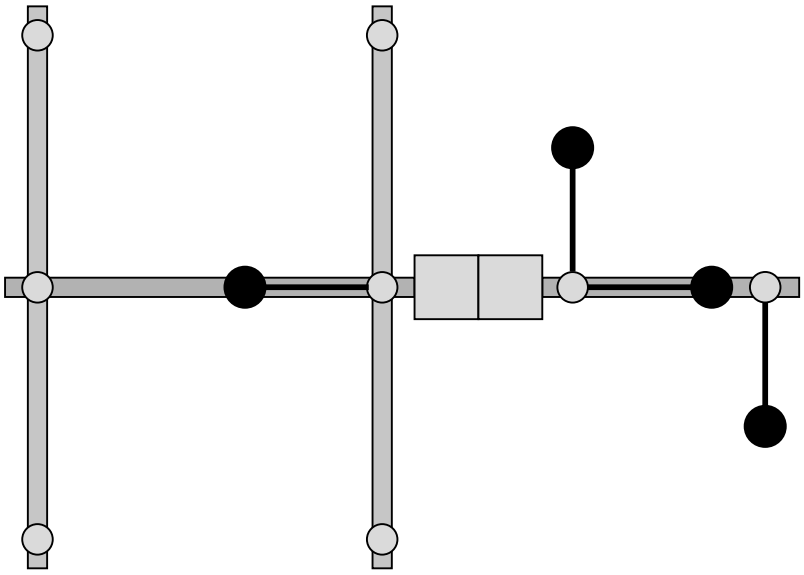

Traverse Switch

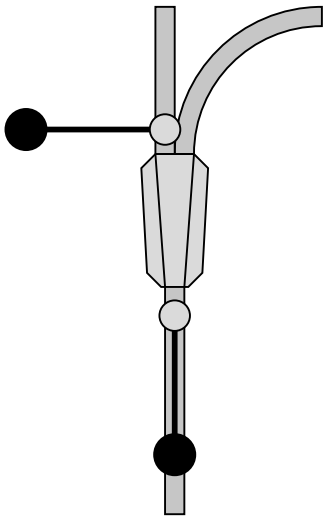

Side rail switch

6. Installation methods

The rail system can only be installed by certified personnel in accordance with applicable installation instructions.

Etac is only responsible for the system if the rail system with trolley and/or lifting motor has been supplied by Etac and is installed by authorised staff.

The lifter's SWL may NEVER exceed the SWL of the rail system.

There may never be installed more than one lifting motor per rail system.

The SWL of the rail system must be clearly marked on the rail.

All rail systems must be provided with end stops and end caps to prevent the trolleys from running off the system.

Etac recommends that annual inspections of the system be carried out according to "Check points for periodic inspection".

Please contact Your Service Partner or Molift by Etac Customer Support in case of defects to the rail system.

Tools needed for installation and surveys

Survey tools:

Digital camera
Laser range meter
Measure tape: minimum 5 meter length
Stairs
Flash light

Installation tools:

Security equipment (gloves, helmet, boots, ear protection plugs)
Laser range meter and folding rule
Laser leveler
Working platform / stairs
Lifting equipment for profiles
Saw and table for cutting profiles
Electric drill (battery powered)
«standard» hand tooling
Lights

Principle work flow for OH installation

Recommended steps below to be performed by installer on site:

1. **Measurements – verify dimensions in drawings / results of site survey**
    a. Report any mistaken dimensions or failures early in the project
    b. Place the profiles on floor according to layout – do you have to modify profiles?
    What about the planned placement of the charging stations? Are they correct?
2. **Locate and mark fixing points**
    a. On the rails use a laser beam to identify locations of the fixings / holes
    b. Does the planned installation make any conflicts with other installations / suspended ceiling grid (are the grid already in place?)
3. **Drill holes**
    a. Use correct dimensions on drill bit according to the manufacturers specifications. (diameter / depth)
    b. Remove dust and remains after drilling
4. **Mount fixings and attachments**
    a. Fix brackets to ceiling
    b. Roughly adjust telescopes and threaded rods (laser leveller)
5. **Elevate rail system**
    a. Insert all multibolts necessary. Insert from the profile end.
    b. Elevate MRS rails and curves to brackets
6. **Lock profiles to brackets**
    a. Join rail with joint sets
    b. Use correct tightening torques according to installation instructions.
    c. Loctite where necessary according to installation instructions
7. **Mount trolleys and end stops**
    a. Single / straight systems
    b. Traverses
    c. Combined systems
8. **Mount lift motor**
    a. Trolley
    b. Charging stations / IRC
    c. Start up lift motor
9. **Check installations acording to Checklist for installation of Molift Rail System**

7. Final Installation Procedure

After finished installation a load test (according to ISO 10535:2006) must be performed. Maximum Safe Working Load shall be applied on all mounted attachments. Perform at least six lifts (lift height approx. 15 cm/6 inches) SWL at min. 6 randomly selected points along the rail.

7.1 Load test: Straight Rail System

Lift the load approx. 15cm to apply the maximum load. Travel the applied load along the rail from one end stop to the other end stop, with a 10 second pause under each attachment point. Travel as the dashed line shows in picture.

7.2 Load test: Traverse Rail System

Apply the maximum load for the installed overhead rail system. Place the carriage with the applied load at the end stop of the secondary rail (1). Move the secondary rail, with a pause under each attachment point, from one end stop to the other end stop of the first primary rail. Continue by moving the applied load diagonally through the centre of the system over to the other side, as the dashed line shows. Now continue by moving the secondary rail with the applied load, from (2), with a pause under each attachment point, from one end stop to the other end stop of the second primary rail.

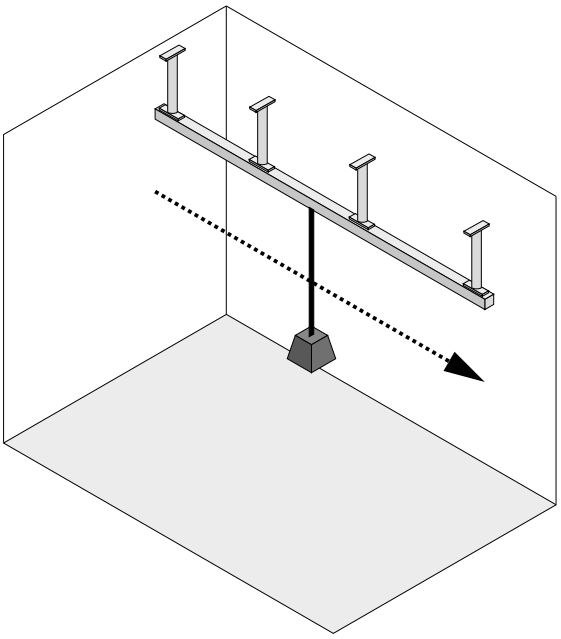

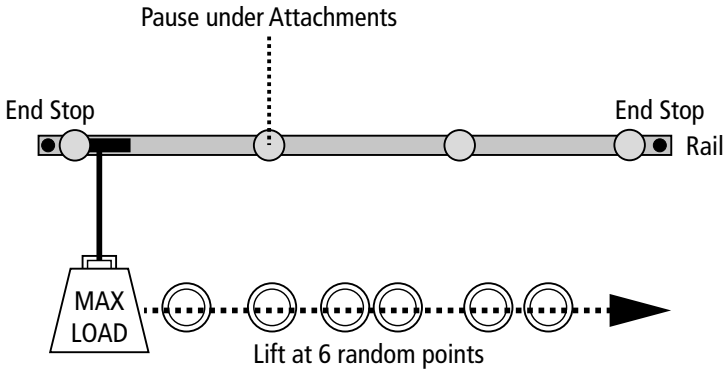

Figure: Load test: Straight Rail System

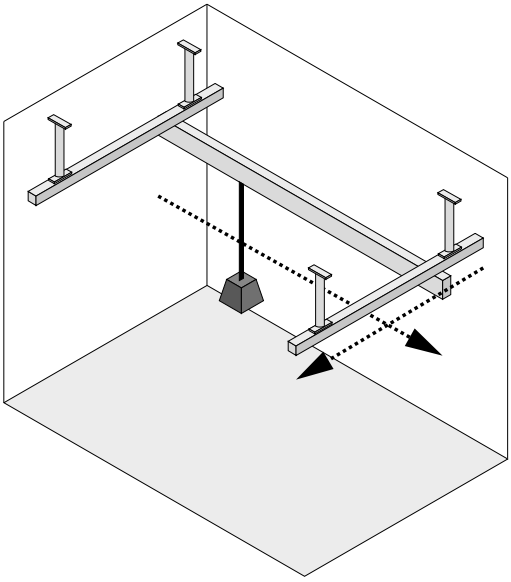

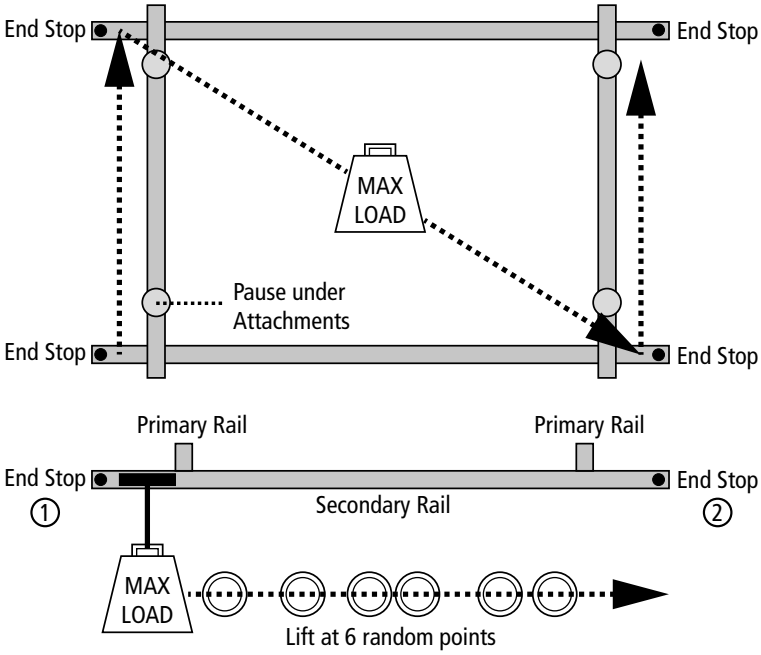

Figure: Load test: Traverse Rail System

7.3 Identification

After an approved test load procedure the overhead system is ready for identification marking. This marking is made with a decal rail marking on which the maximum load is to be stated. The decal must be placed clearly visible on the rail in the system to which the lift motor is attached. When a Periodic Inspection of the system is performed a test symbol will be placed in the circular area on the rail decal marking. A Periodic Inspection of the overhead system must be made at least once a year.

Article no.

1109014	MRS Label, SWL

SWL labels are supplied together with end stop.

7.4 Installation Certification

After approved functional and maximum load test the installation will be finalized by the issue of Checklist for installation of Molift Rail system as an installation certificate. The installation certificate has to be issued by installation personnel authorized by Etac.

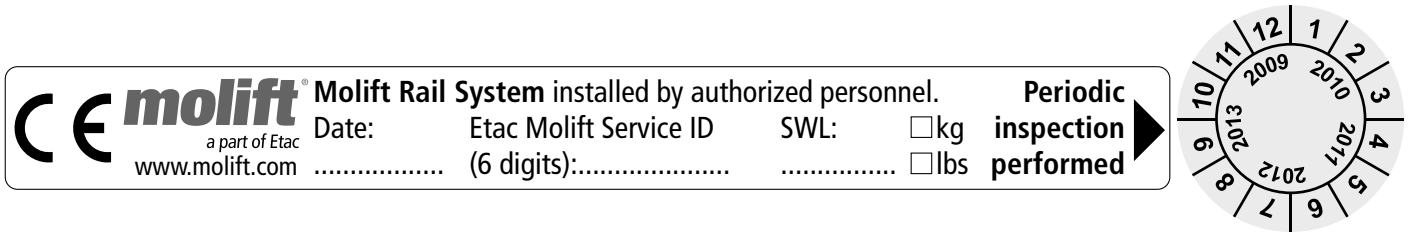

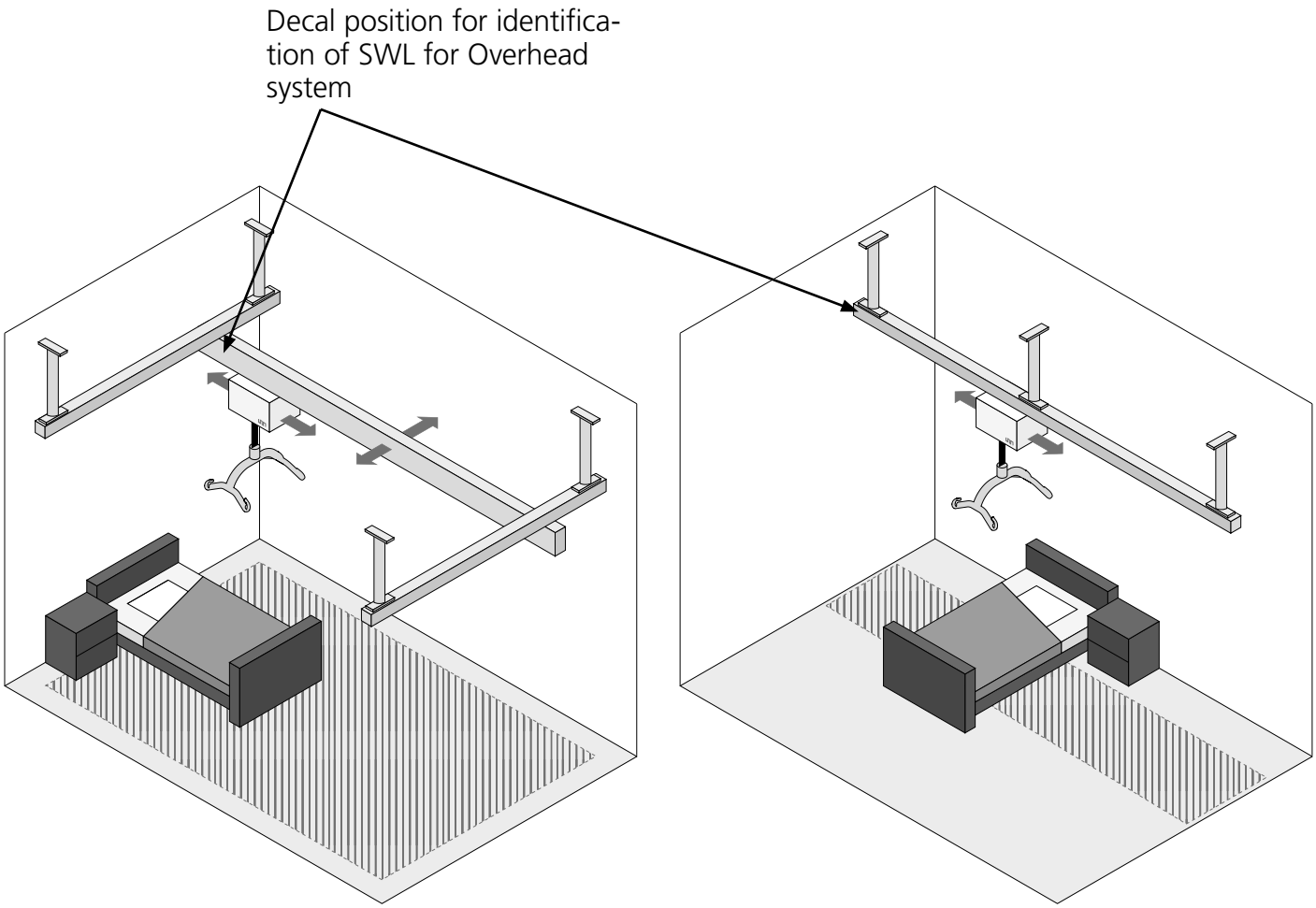

8. System configuration - Examples

This Chapter describes a few of the most common design solutions of Molift Rail System. Shows combination possibilities, measurements and specifications. For each examples of configuration there is a reference to the Installation Instructions in chapter 9.

8.1 Single Rail system

Straight rail system - Ceiling mounted suspended

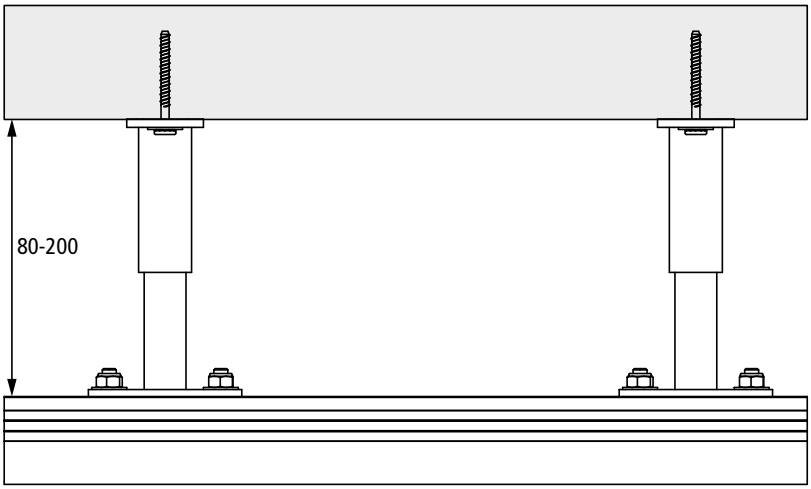

Straight rail system
Ceiling mounted
Suspended mounted
Telescope bracket (Threaded)

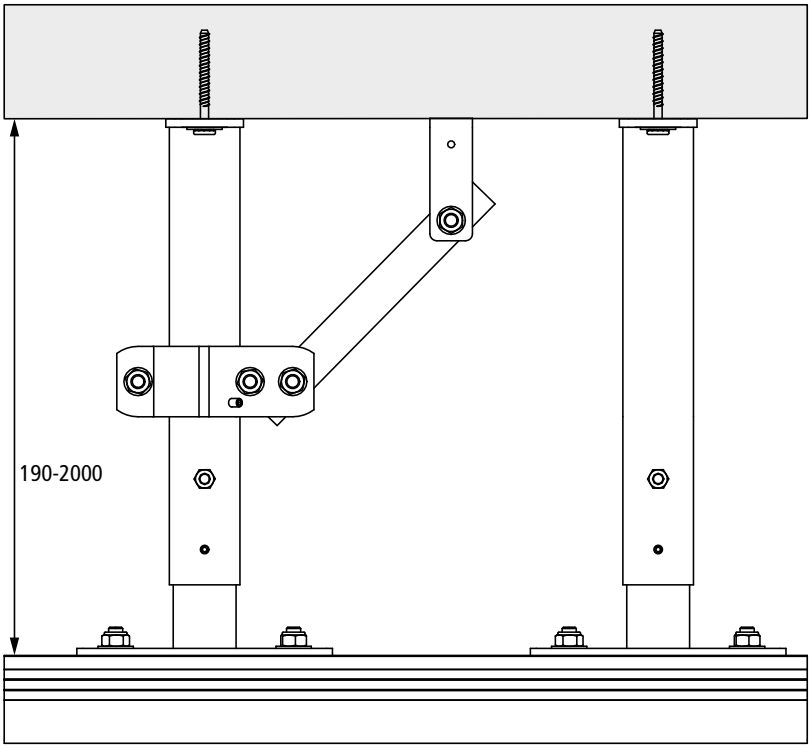

Straight rail system
Ceiling mounted
Suspended mounted
Telescope bracket

Configuration example:

Products	Description	Incuding	Item no	Qty
Rail profile	Rail H62 OC/A - 6m-length		1109002-6m	1
Brackets	Telescope Bracket Set 890-1300 mm		1109730	3
	Side Support unit for Telescope Brackets		1109815	3
End stops	End stop for motor trolley		1109410	2
Endcaps	End Cap Rail H62 Grey		1109320	2

Straight rail system - Ceiling direct mounted

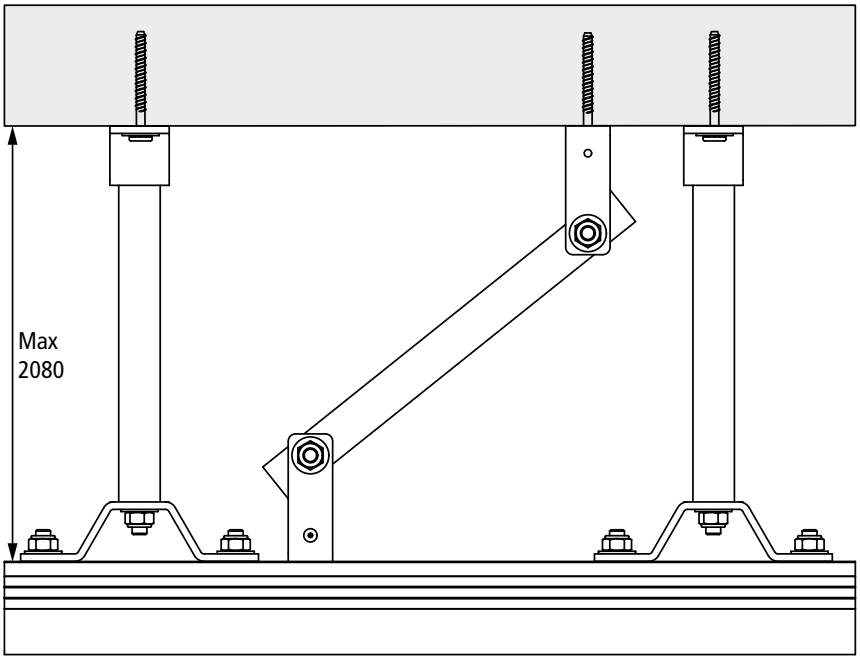

Straight rail system
Ceiling mounted
Suspended mounted
Threaded rod bracket

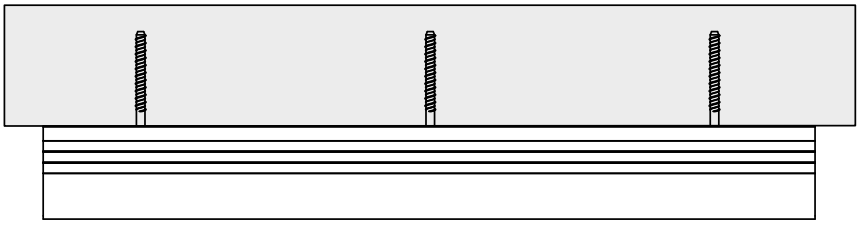

Straight rail system
Ceiling mounted
Direct mounted
Rail H62 DC

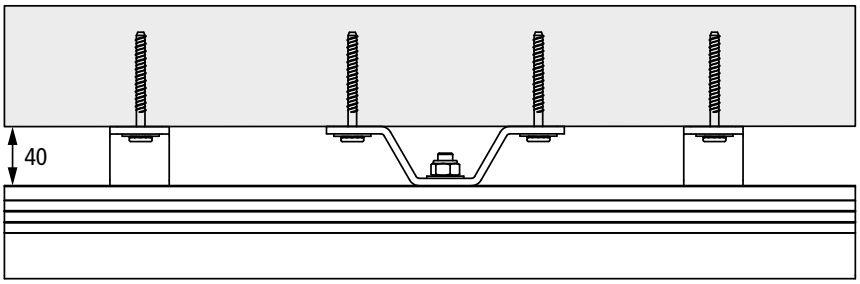

Straight rail system
Ceiling mounted
Direct mounted
Rail H62 DC
Ceiling bracket 40mm

Straight rail system - Wall mounted

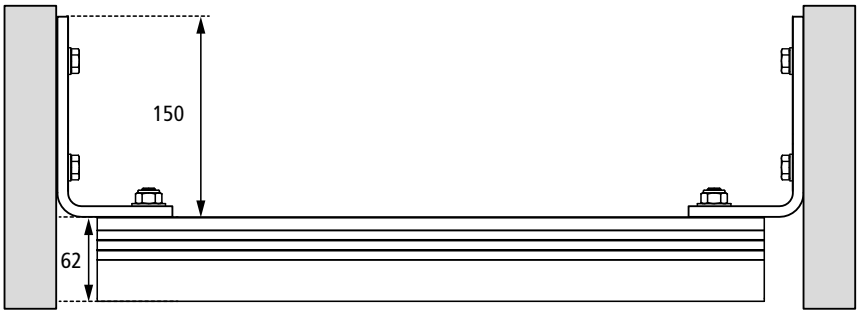

Straight rail system
Wall mounted
Wall bracket
H62 OC

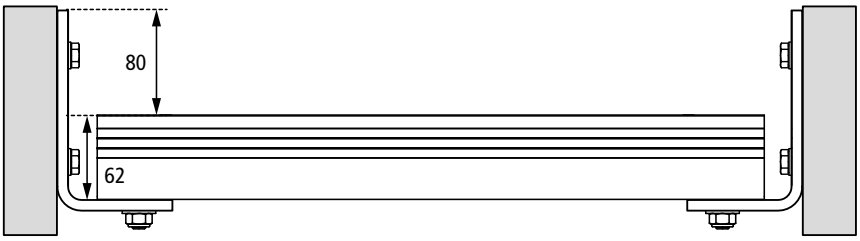

Straight rail system
Wall mounted
Wall bracket
H62 OC

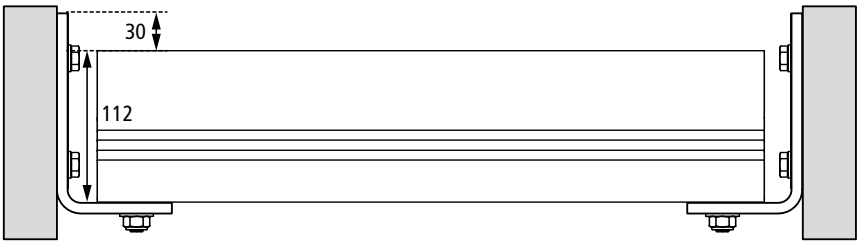

Straight rail system
Wall mounted
Wall bracket
H112 OC

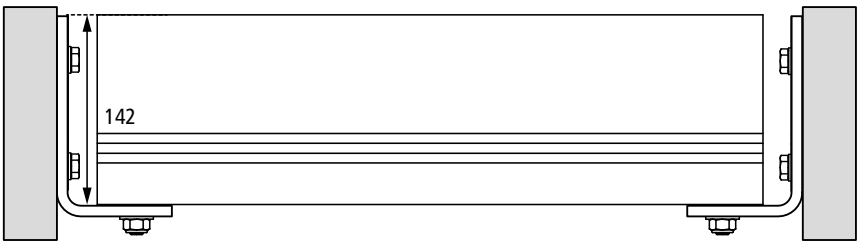

Straight rail system
Wall mounted
Wall bracket
H142 OC

Configuration example:

Products	Description	Incuding	Item no	Qty
Rail profile	Rail H62 OC/P - 6m-lengde		1109003-6m	1
Brackets	Wall bracket unit (White)		1109259	2
End stops	End stop for motor trolley		1109410	2
Endcaps	End Cap Rail H62 White		1109340	2

8.2 Traverse Rail system

Traverse rail system - Ceiling mounted suspended

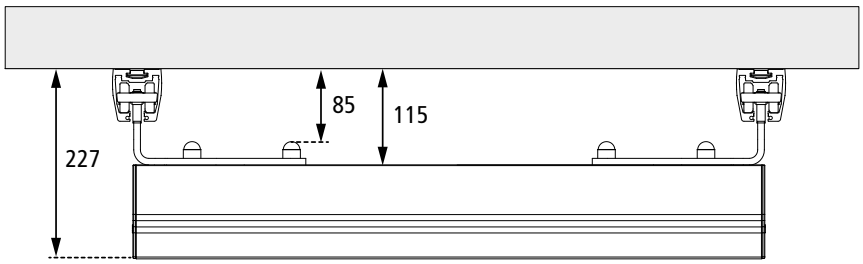

Traverse rail system
Ceiling mounted
Direct mounted
Primary Rail H62 DC
Secondary Rail H112 OC

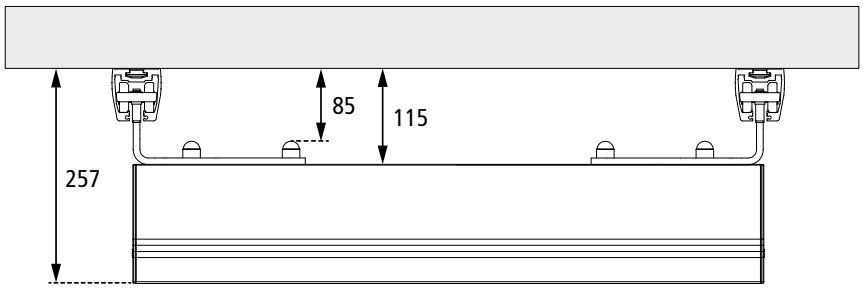

Traverse rail system
Ceiling mounted
Direct mounted
Primary Rail H62 DC
Secondary Rail H142 OC

Configuration example:

Products	Description	Incuding	Item no	Qty	
Rail profile	Rail H62 DC/P		1109005	4	2
	Rail H112 OC/P		1109009	3	1
Trolleys	Traverse trolley set (white)	2 trolleys	1109590		1
	Traverse mounting kit (under trolleys)	2 sets, Bolts, nuts and washers	1109345		1
End stops	End stop for motor trolley		1109410		2
	End stop for traverse trolley		1109411		4
Endcaps	End Cap Rail H62 White		1109340		4
	End Cap Rail H112 White		1109341		2

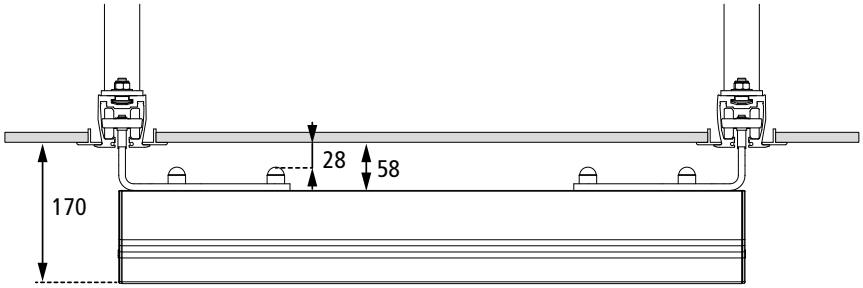

Traverse rail system
Ceiling mounted
Suspended mounted
Telescope bracket
Primary Rail H62 CC
Secondary Rail H112 OC

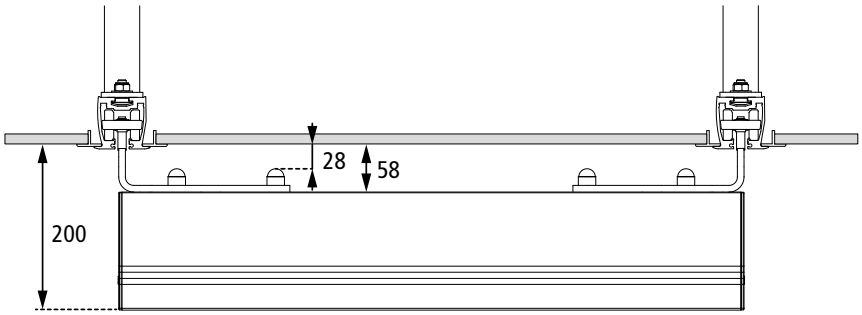

Traverse rail system
Ceiling mounted
Suspended mounted
Telescope bracket
Primary Rail H62 CC
Secondary Rail H142 OC

Configuration example:

Products	Description	Incuding	Item no	Qty	
Rail profile	Rail H62 CC/P		1109001	4	2
	Rail H142 OC/P - 4m-length		1109011-4m		1
Trolleys	Traverse trolley set (white)	2 trolleys	1109590		1
	Traverse mounting kit (under trolleys)	2 sets, Bolts, nuts and washers	1109345		1
Brackets	Telescope Bracket Set 120-200 mm		1109710		6
End stops	End stop for motor trolley		1109410		2
	End stop for traverse trolley		1109411		4
Endcaps	End Cap Rail H62 White		1109340		4
	End Cap Rail H142 White		1109342		2

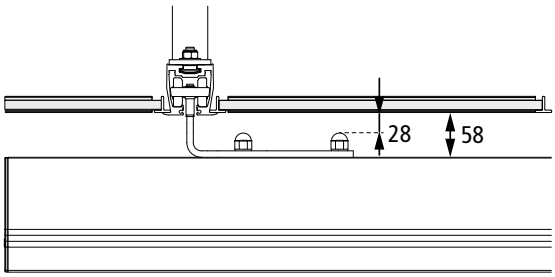

Traverse rail system
Ceiling mounted
Suspended mounted
Telescope bracket
Primary Rail H62 CC
Secondary Rail H112 OC

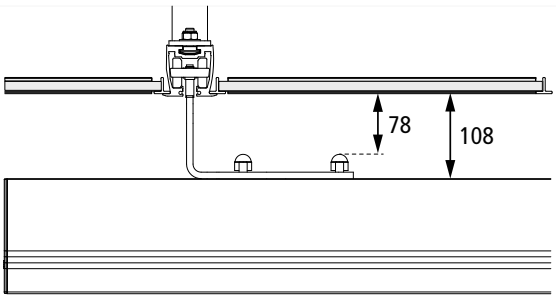

Traverse rail system
Ceiling mounted
Suspended mounted
Telescope bracket
Primary Rail H62 CC
Secondary Rail H112 OC
Traverse trolley +50mm

Traverse rail system - Wall mounted

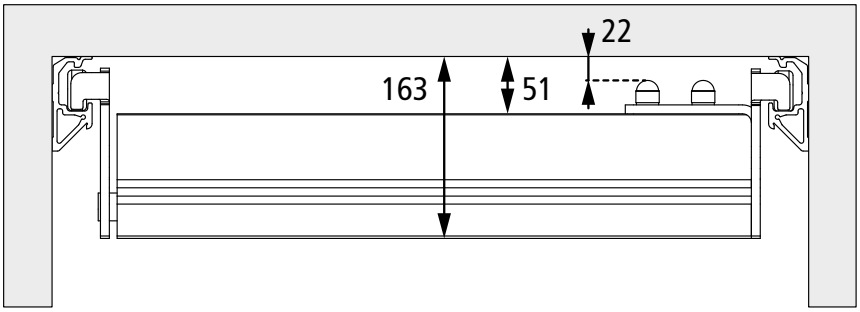

Traverse rail system
Wall mounted
Wall rail
Primary Rail H85 W
Secondary Rail H112 OC

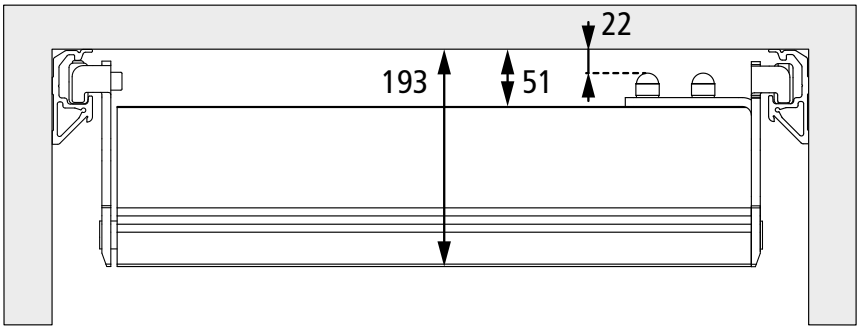

Traverse rail system
Wall mounted
Wall rail
Primary Rail H85 W
Secondary Rail H142 OC

Configuration example:

Products	Description	Incuding	Item no	Qty
Rail profile	Rail H85 W/A 6m-length painted	(4 meter)	1109160	2
	Rail H142 OC/P - 4m-length		1109011-4m	1
Trolleys	Wall mounted traverse trolley set RH142	2 Trolleys and 4 end stoppers	1109166	1
End stops	End stop for motor trolley		1109410	2
Endcaps	End Cap Rail H142 White		1109342	2

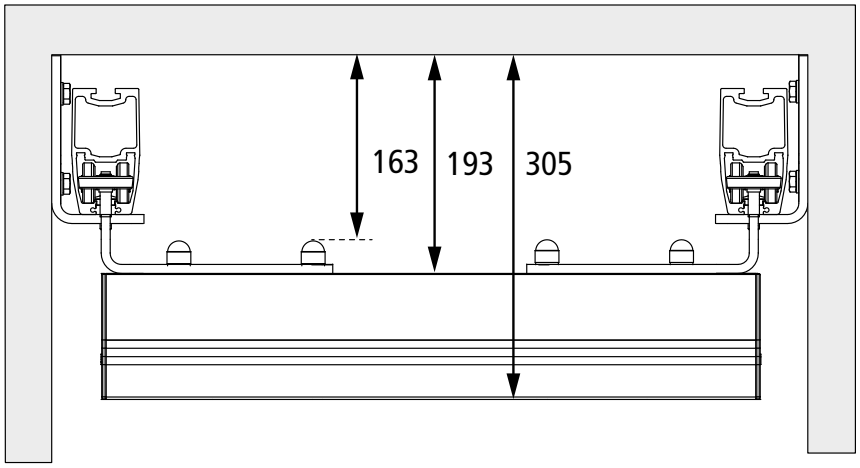

Traverse rail system
Wall mounted
Wall bracket
Primary Rail H112 OC
Secondary Rail H112 OC

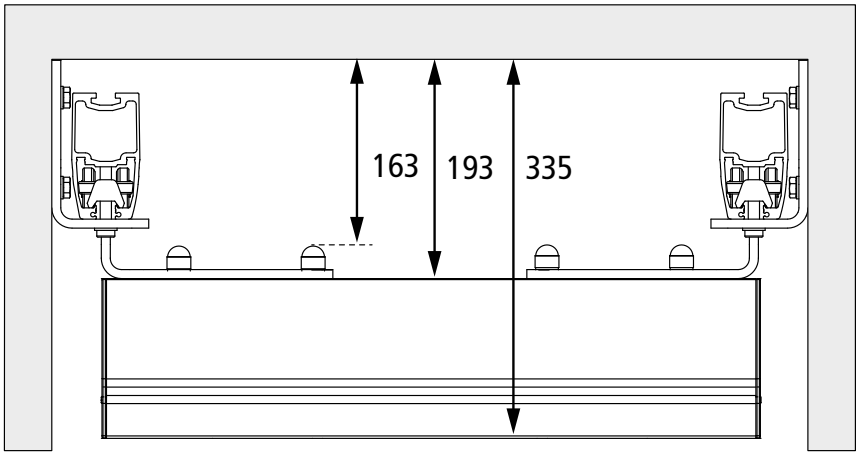

Traverse rail system
Wall mounted
Wall bracket
Primary Rail H112 OC
Secondary Rail H142 OC

Configuration example:

Products	Description	Incuding	Item no	Qty
Rail profile	Rail H112 OC/P 4m-length		1109009-4m	2
	Rail H112 OC/P 4m-length		1109009-4m	1
Trolleys	Traverse trolley set (white)	2 trolleys	1109590	1
	Traverse mounting kit (under trolleys)	2 sets, Bolts, nuts and washers	1109345	1
Brackets	Wall bracket unit (White)		1109259	4
End stops	End stop for motor trolley		1109410	2
	End stop for traverse trolley		1109411	4
Endcaps	End Cap Rail H112 White		1109341	6

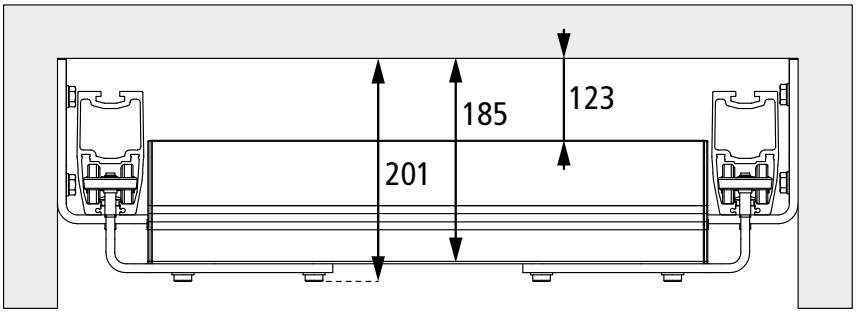

Traverse rail system
Wall mounted
Wall bracket
Primary Rail H112 OC
Secondary Rail H112 OC

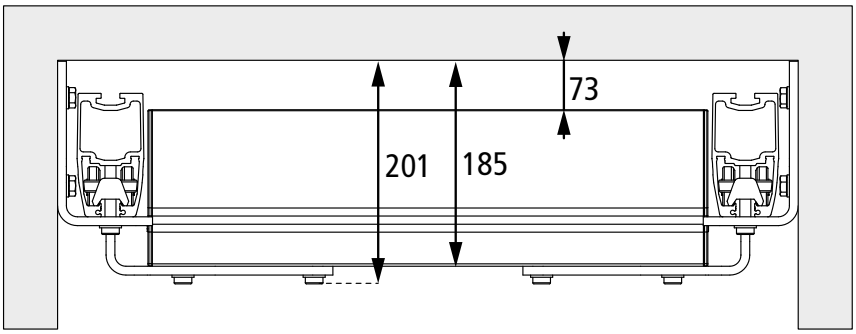

Traverse rail system
Wall mounted
Wall bracket
Primary Rail H112 OC
Secondary Rail H142 OC

Configuration example:

Products	Description	Incuding	Item no	Qty
Rail profile	Rail H112 OC/P 4m-length		1109009-4m	2
	Rail H112 OC/P 4m-length		1109009-4m	1
Trolleys	Traverse trolley set (white)	2 trolleys	1109590	1
	Traverse mounting kit (between primary rail)	2 sets, Bolts, nuts and washers	1109353	1
Brackets	Wall bracket unit (White)		1109259	4
End stops	End stop for motor trolley		1109410	2
	End stop for traverse trolley		1109411	4
Endcaps	End Cap Rail H112 White		1109341	6

9. Installation instructions

Specific Installation Instructions for the various mounting options available upon request to molift@etac.com. Installation instructions are supplied with the purchased article.

Documents:

Article no.	Description	Document
1109910, 1109912 1109940, 1109942	MRS Threaded Rod	19-514 installation instruction.pdf
1109920, 1109922 1109950, 1109952	MRS Threaded Rod support	19-515 installation instruction.pdf
1109695, 1109700 1109710, 1109715 1109718, 1109720 1109725, 1109730 1109735	40 mm bracket	
1109700, 1109710	Threaded Telescope bracket 80-200mm	19-463 installation instruction.pdf
1109715, 1109718 1109720, 1109725 1109730, 1109735	Telescope bracket 19-2000mm	19-466 installation instruction.pdf
	Box-in Traverse mounting	19-P20 installation instruction.pdf
	Application tool IRC conductive tape	
1109410, 1109411	End Stop and drill guide (+ End cap)	19-185 installation instruction.pdf
1109029, 1109650	19-P04E Installation MRS Transition Coupling	19-P04 installation instruction.pdf
1109029, 1109650	Traverse Switch	19-090 installation instruction.pdf

10. Maintenance

Periodic inspection of the rail system should be undertaken at least once a year to ensure that the device operate properly and safely.

Periodic inspection Checklist

When performing a periodic inspection, the inspector shall fill out the inspection report for Molift Rail System. The reports should be retained by the person(s) responsible for servicing the hoist. If the inspection reveals defects and damages, the owner shall be notified and a Non-conformity report should be sent to Etac. A new periodic inspection must be performed after repair.

> ⚠ **In the event of damage that jeopardizes the safety of the patient, the rail system shall immediately be taken out of service and marked clearly with "out of order" and shall not be used until the rail system is repaired**

When periodic inspection is completed the inspector shall mark the hoist with a sticker on the control label showing the date when periodic inspection is performed, and this will then indicate when next service should be performed.

Checklist after Service and Repair

Use the checklist to verify that the rail system is properly installed safe before use. Document the job by signing the Service Log.

Service Log

Defects and damage of importance to the safety of the Rail system which have occurred between inspections and have already lead to corrective actions should be entered in the Service logbook. A record of the date of inspection of the hoist and inspection result should be noted in the logbook together with a short description of the incident and the signature of the inspector.

This will enable the owner and service partner to see previous history for the rail system and in that way maybe making future fault finding and repairs easier.

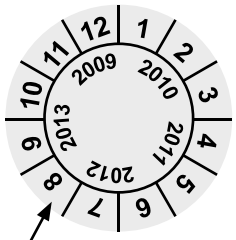

Mark label with month and year of inspection

Any Service or Repair should be documented in the service log, and verified by using the Checklist after service and repair.

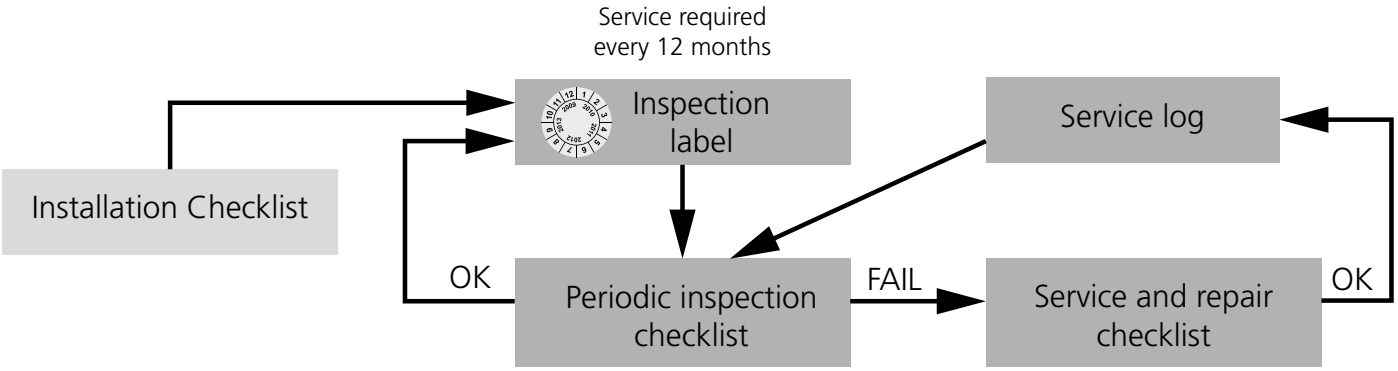

Figure: Documentation of maintenance flow chart.

Checklist for installation of Molift Rail system

Installation Certificate

Customer:
.....
...
Room number / Section:
.....

.....

System should consist of only original MRS components. If not Decalaration of conformity is not valid and Etac is not responisble for warranty of the system

Checkpoints

N/A	OK	
☐	☐	All rail system components are fitted according to applicable installation instructions.
	☐	Check that there is no shavings after drilling or cutting or other objects in the rail
	☐	Clean after mounting
	☐	The trolley / hoist is to run smoothly and without any noise through the entire rail system
	☐	All rail ends in the system have been fitted with end stops and end covers.
	☐	All end stop screws are tightened to 40 Nm/ 30 ftlbs
	☐	Performed at least six lifts (lift height approx. 15 cm/6 inches) with load = system SWL at randomly selected points along the rail. The trolley/lift runs smooth through the entire system with load=SWL and: ☐ transition coupling ☐ switch
☐	☐	The hoist fitted to the system has the same or lower SWL
☐	☐	The hoist is checked seperately according to Hoist User manual.
	☐	The system is correctly marked with SWL label, with date and a valid signature and certificate number by the authorized installer.

All parts and components which before, during or after installation are damaged, deformed or are otherwise defective must be replaced or repaired before the system can be brought into use!

Performed by

Installation must be performed by a person who is certified by Etac education.

Date/Place:
.....
Signature:
.....
Etac Molift Service ID (6 digits):

.....

Comments:

Periodic Inspection for Molift Rail System

In accordance with ISO:10535 Annex B.

Installation Year:
.....
Owner:
.....
.....

Situation of use:
☐ Home
☐ Hospital
☐ Nursing home
☐ Other:
.....

Physical examination

Test FUNCTION and check for wear.
All checkpoints must be checked of to approve the rail system for further use.

	OK
The entire rail system with traverse, trolleys, motors, and switches have been tested with load and is approved without faults with no loose or missing parts.	☐

Visual examination

Visual examination of load bearing structure to make sure there is no damage, cracks, frays or deformation. All checkpoints must be checked of to approve the rail system for further use.

	OK	N/A
The entire system has been checked for damage, wear and deformation (especially end stops and switches).	☐	
All visible bolts have been checked. "Loose" bolts have been fastened according to the torque specified in applicable installation insctructions.	☐	
All ends are secured by end stops	☐	
Trolleys, including straps for climbing have been checked and has no damage or faults.	☐	
The system is clearly marked with SWL.	☐	
Systems installed in swimming facilities have been checked and has no corrosion.	☐	

Performed by

Periodic inspection should be performed by a person who is certified by Etac education.

Date/Place:
.....
Signature:
.....
Etac Molift Service ID (6 digits):

.....

☐ Approved without faults
☐ Approved after repair.
☐ System is marked with "out of order" and waiting for repair. (perform new)
☐ System is not eligible for repair and taken out of service.

If periodic inspection reveals any defect, wear or other damage that jeopardizes the safety of the user the system may not be used until the deficiency has been eliminated. Defects and damages should be reported back to the manufacturer for action in a non-conformity report (NCR).

☐ The owner is notified
☐ NCR report sent to Etac, molift@etac.com

Non conformity report can be obtained from www.molift.com or by request, molift@etac.com.

Any Service or Repair should be documented in the service log, and verified by using the Checklist for installation of Molift Rail System

Checklist after Service and Repair

Installation Certificate

Customer:
.....
...

Installation Year:
.....

Room number / Section:
.....

.....

System should consist of only original MRS components. If not Decalaration of conformity is not valid and Etac is not responisble for warranty of the system

Checkpoints

N/A	OK	
	☐	Check that there is no shavings after drilling or cutting or other objects in the rail
	☐	Clean after mounting
	☐	The trolley / hoist is to run smoothly and without any noise through the entire rail system
	☐	All rail ends in the system have been fitted with end stops and end covers.
	☐	All end stop screws are tightened to 40 Nm/ 30 ftlbs
	☐	Performed at least six lifts (lift height approx. 15 cm/6 inches) with load = system SWL at randomly selected points along the rail. The trolley/lift runs smooth through the entire system with load=SWL and: ☐ transition coupling ☐ switch
☐	☐	The hoist fitted to the system has the same or lower SWL
	☐	The system is correctly marked with SWL label, with date and a valid signature and certificate number by the authorized installer.

All parts and components which before, during or after service and repair are damaged, deformed or are otherwise defective must be replaced or repaired before the system can be brought into use!

Performed by

Service and Repair must be performed by a person who is certified by Etac education.

Date/Place:
.....
Signature:
.....
Etac Molift Service ID (6 digits):

.....

Comments:

Find your distributor
visit www.molift.com

Etac AS
Etac Supply Gjøvik
Hadelandsveien 2, 2816 Gjøvik, Norway
Tel +47 4000 1004
molift@etac.com www.molift.com

molift®
a part of Etac