Dimensions for MediTek 120 Deluxe, 140 Deluxe & 160 Deluxe

MediTek Stairlifts are renowned world wide for their quality and reliability. Being manufactured to such high and exacting standards enables MediTek to offer a product range with some of the highest lifting capacities in the world and yet fit some of the narrowest staircases. In general MediTek Stairlifts come in two seating configurations, Sit-On or Stand and Perch, the dimensions below are offered as a guide to the dimension for the sit down model irrespective of lifting capacity.
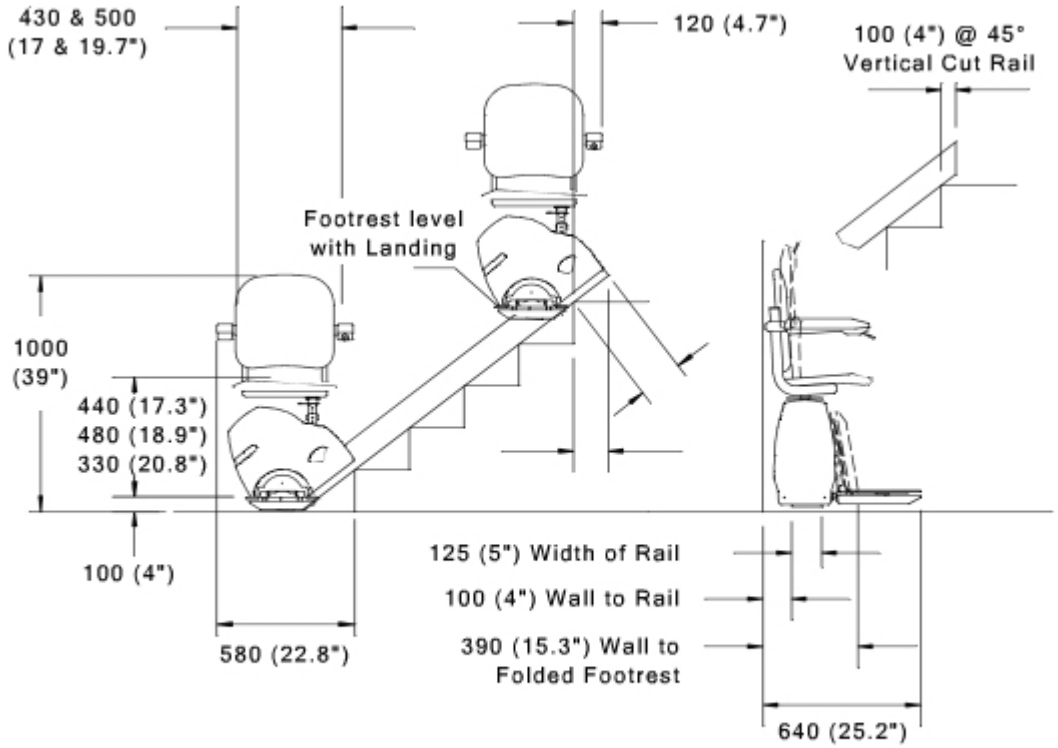
Technical Diagram